MK-RC1 SERIES • CARBON STEEL

One-Piece Clamping Rigid Coupling • 一体式夹紧型刚性联轴器

Single-Slit Clamping Sleeve with Keyway acc. to DIN 6885-1 P9 • C45E Steel (EN 1.1191)

EUROPEAN STANDARD • 欧洲标准体系
ISO 286-2 • DIN 6885-1 • ISO 4762 • DIN 705

CAD STRUCTURAL & TOLERANCE DRAWING • 结构尺寸与欧标公差图

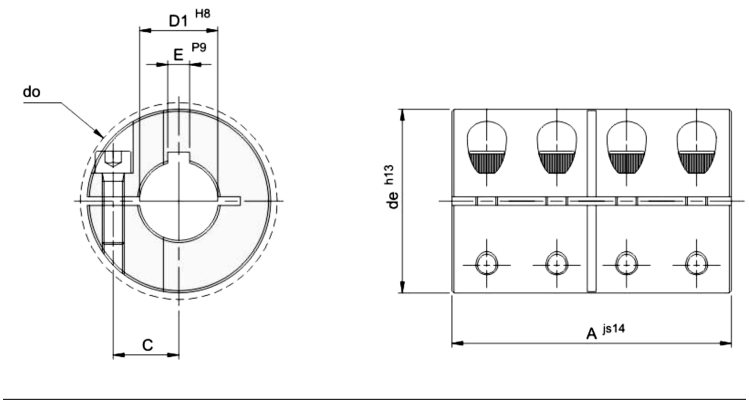

D1^{H8} Bore • 轴孔公差 (ISO 286-2) E^{P9} Keyway • 键槽公差 (DIN 6885-1)
de^{h13} OD • 外径公差 A^{js14} Length • 长度公差

EUROPEAN TECHNICAL SPECIFICATIONS • 欧洲技术规范与特性

MATERIAL STANDARD • 材质标准
C45E Carbon Steel (EN 1.1191 / DIN 1.1191 / AISI 1045)
欧洲标准 C45E 优质中碳钢（对应 45号钢），表面发黑防锈处理

CLAMPING FASTENERS • 锁紧螺钉
4 × ISO 4762 (DIN 912) Class 12.9
4 颗内六角圆柱头螺钉 ISO 4762 (DIN 912) 12.9级高强度合金钢

DIMENSIONAL TOLERANCES • 尺寸与形位公差
Bore ISO 286-2 H8 • Keyway DIN 6885-1 P9 • OD h13 • Length js14
内孔公差 H8 • 平键槽公差 P9 • 外径 h13 • 总长 js14

SURFACE ROUGHNESS & SPEED • 表面粗糙度与最高转速
Surface Finish Rz 16 µm (Ra 3.2 µm) • Max. Speed 4,000 min^{-1} (rpm)
表面粗糙度 Rz 16 微米 • 许用最高工作转速 4,000 转/分钟

DESIGN & MOUNTING FEATURE • 结构与安装优势
One-piece single-slit clamping design with feather keyway (DIN 6885-1 P9) ensures zero-backlash torsional rigidity and concentric shaft alignment.
一体式单缝夹紧结构配标准平键槽 (DIN 6885-1 P9)，兼具摩擦抱紧与键传动双重抗扭锁定。

DIMENSIONAL & PERFORMANCE DATA TABLE • 尺寸与扭矩参数表

Material: C45E Carbon Steel (EN 1.1191 / DIN 1.1191 / AISI 1045) | Fasteners: 4 × ISO 4762 (DIN 912) Class 12.9

Model 型号	Product Code 产品代码	Bore D1^{H8} 内孔 [mm]	OD de^{h13} 外径 [mm]	Clearance do 螺钉回转径 [mm]	Length A^{js14} 总长 [mm]	Nominal Torque T_{KN} 额定扭矩 [Nm]	Screw Pitch C 螺钉孔距 [mm]	Keyway E^{P9} 键槽宽 [mm]	Clamping Screws • 锁紧螺钉 (4 × ISO 4762 (DIN 912) Class 12.9)			Mass 质量 [kg]
									Qty n 数量	Size 规格	Tightening T_s 锁紧扭矩 [Nm]	
MK-RC1 6	MKRC1-006	6	18	21.5	30	30	5.9	2	4	M3 × 8	2.1	0.05
MK-RC1 8	MKRC1-008	8	24	27.1	35	50	9.0	2	4	M3 × 10	2.1	0.10
MK-RC1 10	MKRC1-010	10	29	33.0	45	100	10.6	3	4	M4 × 12	4.6	0.18
MK-RC1 12	MKRC1-012	12	29	33.0	45	100	10.6	4	4	M4 × 12	4.6	0.18
MK-RC1 14	MKRC1-014	14	34	39.4	50	190	12.0	5	4	M5 × 16	9.5	0.27
MK-RC1 15	MKRC1-015	15	34	39.4	50	190	12.0	5	4	M5 × 16	9.5	0.27
MK-RC1 16	MKRC1-016	16	34	39.4	50	190	12.0	5	4	M5 × 16	9.5	0.26
MK-RC1 20	MKRC1-020	20	42	48.9	65	350	15.4	6	4	M6 × 16	16.0	0.52
MK-RC1 25	MKRC1-025	25	45	51.5	75	390	16.9	8	4	M6 × 16	16.0	0.62
MK-RC1 30	MKRC1-030	30	53	58.7	83	475	20.9	8	4	M6 × 18	16.0	0.92
MK-RC1 35	MKRC1-035	35	67	74.7	95	1100	26.7	10	4	M8 × 25	39.0	1.88
MK-RC1 40	MKRC1-040	40	77	84.0	108	1325	31.8	12	4	M8 × 25	39.0	2.71
MK-RC1 50	MKRC1-050	50	85	94.2	124	2250	34.1	14	4	M10 × 25	77.0	3.52

ENGINEERING & MOUNTING GUIDELINES • 工程选型与安装说明

1. Alignment Requirement • 对中要求: Rigid couplings do not compensate for radial, angular, or axial shaft misalignment. Ensure coaxial shaft alignment within ≤ **0.02 mm TIR** prior to tightening.
2. Progressive Torque Tightening • 螺钉对称锁紧: Tighten all socket head cap screws (**4 × ISO 4762 (DIN 912) Class 12.9**) progressively in a cross/even sequence using a calibrated torque wrench to the specified tightening torque **T_s [Nm]**.

RECOMMENDED SHAFT FIT & APPLICATIONS • 推荐轴配合公差与典型应用

Shaft Tolerance • 推荐轴径公差: ISO 286-2 h6 / k6 (precision drive shafts) or **h7** (general machinery); keyway acc. to **DIN 6885-1 JS9 / P9**.
Typical Applications • 典型应用领域: Precision servo axes, vertical lead-screw drives, packaging synchronization shafts, linear actuators, and encoder/tachometer transmission shafts. (精密伺服传动轴、立式丝杠直联、包装同步主轴、线性模组及高刚性编码器联接。)

MK-RC2 SERIES • CARBON STEEL

Two-Piece Split Clamping Rigid Coupling • 分体式双半夹紧型刚性联轴器

Radial Split Clamping Shells with Keyway acc. to DIN 6885-1 P9 • C45E Steel (EN 1.1191)

EUROPEAN STANDARD • 欧洲标准体系
ISO 286-2 • DIN 6885-1 • ISO 4762 • DIN 705

CAD STRUCTURAL & TOLERANCE DRAWING • 结构尺寸与欧标公差图

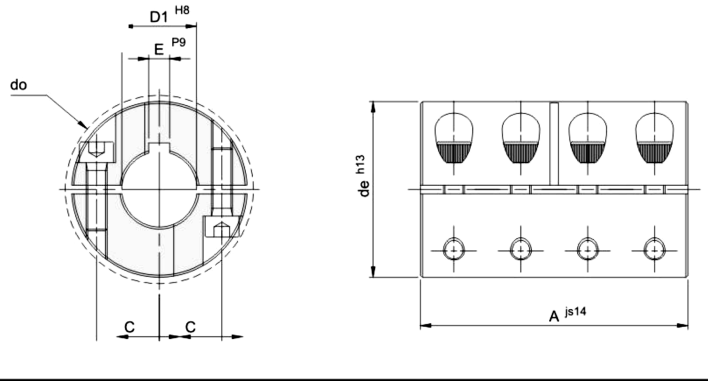

$D1^{H8}$ Bore • 轴孔公差 (ISO 286-2) E^{P9} Keyway • 键槽公差 (DIN 6885-1)
de^{h13} OD • 外径公差 A^{js14} Length • 长度公差

EUROPEAN TECHNICAL SPECIFICATIONS • 欧洲技术规范与特性

MATERIAL STANDARD • 材质标准
C45E Carbon Steel (EN 1.1191 / DIN 1.1191 / AISI 1045)
欧洲标准 C45E 优质中碳钢（对应 45号钢），表面发黑防锈处理

CLAMPING FASTENERS • 锁紧螺钉
8 × ISO 4762 (DIN 912) Class 12.9
8 颗对称内六角圆柱头螺钉 ISO 4762 (DIN 912) 12.9级高强度合金钢

DIMENSIONAL TOLERANCES • 尺寸与形位公差
Bore ISO 286-2 H8 • Keyway DIN 6885-1 P9 • OD h13 • Length js14
内孔公差 H8 • 平键槽公差 P9 • 外径 h13 • 总长 js14

SURFACE ROUGHNESS & SPEED • 表面粗糙度与最高转速
Surface Finish Rz 16 µm (Ra 3.2 µm) • Max. Speed 4,000 min^{-1} (rpm)
表面粗糙度 Rz 16 微米 • 许用最高工作转速 4,000 转/分钟

DESIGN & MOUNTING FEATURE • 结构与安装优势
Two-piece radial split clamping design allows radial assembly & disassembly without shifting adjacent shafts or drive components.
分体式双半径向夹紧结构，无需移动电机或轴系即可径向安装与拆卸，维护便捷。

DIMENSIONAL & PERFORMANCE DATA TABLE • 尺寸与扭矩参数表

Material: C45E Carbon Steel (EN 1.1191 / DIN 1.1191 / AISI 1045) | Fasteners: 8 × ISO 4762 (DIN 912) Class 12.9

Model 型号	Product Code 产品代码	Bore $D1^{H8}$ 内孔 [mm]	OD de^{h13} 外径 [mm]	Clearance do 螺钉回转径 [mm]	Length A^{js14} 总长 [mm]	Nominal Torque T_{KN} 额定扭矩 [Nm]	Screw Pitch C 螺钉孔距 [mm]	Keyway E^{P9} 键槽宽 [mm]	Clamping Screws • 锁紧螺钉 (8 × ISO 4762 (DIN 912) Class 12.9)			Mass 质量 [kg]
									Qty n 数量	Size 规格	Tightening T_s 锁紧扭矩 [Nm]	
MK-RC2 6	MKRC2-006	6	18	21.5	30	30	5.9	2	8	M3 × 8	2.1	0.05
MK-RC2 8	MKRC2-008	8	24	27.1	35	50	9.0	2	8	M3 × 10	2.1	0.10
MK-RC2 10	MKRC2-010	10	29	33.0	45	100	10.6	3	8	M4 × 12	4.6	0.18
MK-RC2 12	MKRC2-012	12	29	33.0	45	100	10.6	4	8	M4 × 12	4.6	0.18
MK-RC2 14	MKRC2-014	14	34	39.4	50	190	12.0	5	8	M5 × 16	9.5	0.27
MK-RC2 15	MKRC2-015	15	34	39.4	50	190	12.0	5	8	M5 × 16	9.5	0.27
MK-RC2 16	MKRC2-016	16	34	39.4	50	190	12.0	5	8	M5 × 16	9.5	0.26
MK-RC2 20	MKRC2-020	20	42	48.9	65	350	15.4	6	8	M6 × 16	16.0	0.52
MK-RC2 25	MKRC2-025	25	45	51.5	75	390	16.9	8	8	M6 × 16	16.0	0.62
MK-RC2 30	MKRC2-030	30	53	58.7	83	475	20.9	8	8	M6 × 18	16.0	0.92
MK-RC2 35	MKRC2-035	35	67	74.7	95	1100	26.7	10	8	M8 × 25	39.0	1.88
MK-RC2 40	MKRC2-040	40	77	84.0	108	1325	31.8	12	8	M8 × 25	39.0	2.71
MK-RC2 50	MKRC2-050	50	85	94.2	124	2250	34.1	14	8	M10 × 25	77.0	3.52

ENGINEERING & MOUNTING GUIDELINES • 工程选型与安装说明

1. Alignment Requirement • 对中要求: Rigid couplings do not compensate for radial, angular, or axial shaft misalignment. Ensure coaxial shaft alignment within ≤ **0.02 mm TIR** prior to tightening.
2. Progressive Torque Tightening • 螺钉对称锁紧: Tighten all socket head cap screws (**8 × ISO 4762 (DIN 912) Class 12.9**) progressively in a cross/even sequence using a calibrated torque wrench to the specified tightening torque **T_s [Nm]**.

RECOMMENDED SHAFT FIT & APPLICATIONS • 推荐轴配合公差与典型应用

Shaft Tolerance • 推荐轴径公差: ISO 286-2 h6 / k6 (precision drive shafts) or **h7** (general machinery); keyway acc. to **DIN 6885-1 JS9 / P9**.
Typical Applications • 典型应用领域: Precision servo axes, vertical lead-screw drives, packaging synchronization shafts, linear actuators, and encoder/tachometer transmission shafts.（精密伺服传动轴、立式丝杠直联、包装同步主轴、线性模组及高刚性编码器联接。）

MISHKIN

One-Piece Clamping Rigid Coupling (Inox) • 不锈钢一体式夹紧型刚性联轴器

Single-Slit Clamping Sleeve with Keyway acc. to DIN 6885-1 P9 • EN 1.4301 (AISI 304)

EUROPEAN STANDARD • 欧洲标准体系
ISO 286-2 • DIN 6885-1 • ISO 4762 • DIN 705

CAD STRUCTURAL & TOLERANCE DRAWING • 结构尺寸与欧标公差图

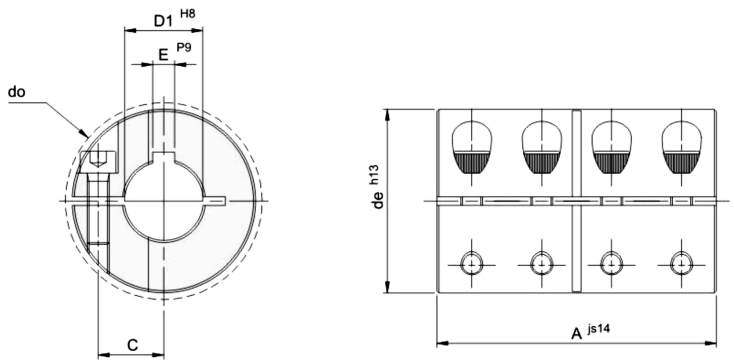

$D1^{H8}$ Bore • 轴孔公差 (ISO 286-2) E^{P9} Keyway • 键槽公差 (DIN 6885-1)
de^{h13} OD • 外径公差 A^{js14} Length • 长度公差

EUROPEAN TECHNICAL SPECIFICATIONS • 欧洲技术规范与特性

MATERIAL STANDARD • 材质标准
X5CrNi18-10 Stainless Steel (EN 1.4301 / AISI 304)
欧洲标准 EN 1.4301 奥氏体不锈钢（对应 304 不锈钢），耐腐蚀洁净表面

CLAMPING FASTENERS • 锁紧螺钉
4 × ISO 4762 (DIN 912) A2-70
4 颗奥氏体不锈钢内六角圆柱头螺钉 ISO 4762 (DIN 912) A2-70

DIMENSIONAL TOLERANCES • 尺寸与形位公差
Bore ISO 286-2 H8 • Keyway DIN 6885-1 P9 • OD h13 • Length js14
内孔公差 H8 • 平键槽公差 P9 • 外径 h13 • 总长 js14

SURFACE ROUGHNESS & SPEED • 表面粗糙度与最高转速
Surface Finish Rz 16 µm (Ra 3.2 µm) • Max. Speed 4,000 min^{-1} (rpm)
表面粗糙度 Rz 16 微米 • 许用最高工作转速 4,000 转/分钟

DESIGN & MOUNTING FEATURE • 结构与安装优势
One-piece single-slit clamping design with feather keyway (DIN 6885-1 P9) ensures zero-backlash torsional rigidity and concentric shaft alignment.
一体式单缝夹紧结构配标准平键槽 (DIN 6885-1 P9)，兼具摩擦抱紧与键传动双重抗扭锁定。

DIMENSIONAL & PERFORMANCE DATA TABLE • 尺寸与扭矩参数表

Material: X5CrNi18-10 Stainless Steel (EN 1.4301 / AISI 304) | Fasteners: 4 × ISO 4762 (DIN 912) A2-70

Model 型号	Product Code 产品代码	Bore $D1^{H8}$ 内孔 [mm]	OD de^{h13} 外径 [mm]	Clearance do 螺钉回转径 [mm]	Length A^{js14} 总长 [mm]	Nominal Torque T_{KN} 额定扭矩 [Nm]	Screw Pitch C 螺钉孔距 [mm]	Keyway E^{P9} 键槽宽 [mm]	Clamping Screws • 锁紧螺钉 (4 × ISO 4762 (DIN 912) A2-70)			Mass 质量 [kg]
									Qty n 数量	Size 规格	Tightening T_S 锁紧扭矩 [Nm]	
MK-RC1 6-SS	SSMKRC1-006	6	18	21.5	30	25	5.9	2	4	M3 × 8	1.1	0.05
MK-RC1 8-SS	SSMKRC1-008	8	24	27.1	35	40	9.0	2	4	M3 × 10	1.1	0.10
MK-RC1 10-SS	SSMKRC1-010	10	29	33.0	45	90	10.6	3	4	M4 × 12	2.5	0.18
MK-RC1 12-SS	SSMKRC1-012	12	29	33.0	45	90	10.6	4	4	M4 × 12	2.5	0.18
MK-RC1 14-SS	SSMKRC1-014	14	34	39.4	50	160	12.0	5	4	M5 × 16	5.4	0.27
MK-RC1 15-SS	SSMKRC1-015	15	34	39.4	50	160	12.0	5	4	M5 × 16	5.4	0.27
MK-RC1 16-SS	SSMKRC1-016	16	34	39.4	50	160	12.0	5	4	M5 × 16	5.4	0.26
MK-RC1 20-SS	SSMKRC1-020	20	42	48.9	65	300	15.4	6	4	M6 × 16	9.6	0.52
MK-RC1 25-SS	SSMKRC1-025	25	45	51.5	75	325	16.9	8	4	M6 × 16	9.6	0.62
MK-RC1 30-SS	SSMKRC1-030	30	53	58.7	83	400	20.9	8	4	M6 × 18	9.6	0.92
MK-RC1 35-SS	SSMKRC1-035	35	67	74.7	95	925	26.7	10	4	M8 × 25	23.0	1.88
MK-RC1 40-SS	SSMKRC1-040	40	77	84.0	108	1100	31.8	12	4	M8 × 25	23.0	2.71
MK-RC1 50-SS	SSMKRC1-050	50	85	94.2	124	1875	34.1	14	4	M10 × 25	46.0	3.52

ENGINEERING & MOUNTING GUIDELINES • 工程选型与安装说明

1. Alignment Requirement • 对中要求: Rigid couplings do not compensate for radial, angular, or axial shaft misalignment. Ensure coaxial shaft alignment within ≤ **0.02 mm TIR** prior to tightening.
2. Progressive Torque Tightening • 螺钉对称锁紧: Tighten all socket head cap screws (**4 × ISO 4762 (DIN 912) A2-70**) progressively in a cross/even sequence using a calibrated torque wrench to the specified tightening torque **T_S [Nm]**.

RECOMMENDED SHAFT FIT & APPLICATIONS • 推荐轴配合公差与典型应用

Shaft Tolerance • 推荐轴径公差: ISO 286-2 h6 / k6 (precision drive shafts) or **h7** (general machinery); keyway acc. to **DIN 6885-1 JS9 / P9**.
Typical Applications • 典型应用领域: Food & beverage processing, pharmaceutical filling lines, cleanroom automation, marine machinery, and corrosive chemical washdown environments.（食品饮料机械、医药灌装线、洁净室自动化设备、船舶机械及酸碱清洗耐腐蚀工况。）

MK-RC2-SS SERIES • STAINLESS STEEL

Two-Piece Split Clamping Rigid Coupling (Inox) • 不锈钢分体式双半夹紧型刚性联轴器

Radial Split Clamping Shells with Keyway acc. to DIN 6885-1 P9 • EN 1.4301 (AISI 304)

EUROPEAN STANDARD • 欧洲标准体系
ISO 286-2 • DIN 6885-1 • ISO 4762 • DIN 705

CAD STRUCTURAL & TOLERANCE DRAWING • 结构尺寸与欧标公差图

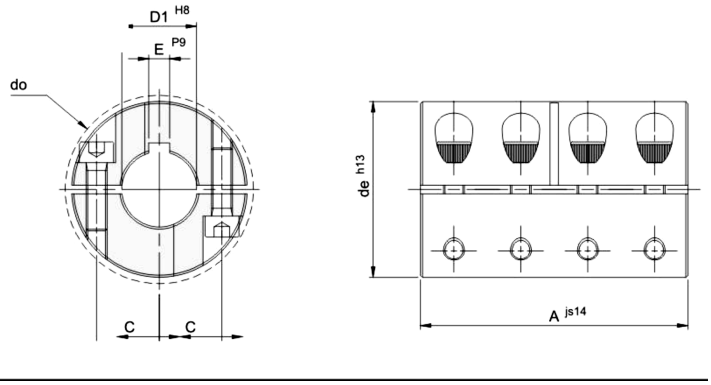

$D1^{H8}$ Bore • 轴孔公差 (ISO 286-2) E^{P9} Keyway • 键槽公差 (DIN 6885-1)
de^{h13} OD • 外径公差 A^{js14} Length • 长度公差

EUROPEAN TECHNICAL SPECIFICATIONS • 欧洲技术规范与特性

MATERIAL STANDARD • 材质标准
X5CrNi18-10 Stainless Steel (EN 1.4301 / AISI 304)
欧洲标准 EN 1.4301 奥氏体不锈钢（对应 304 不锈钢），耐腐蚀洁净表面

CLAMPING FASTENERS • 锁紧螺钉
8 × ISO 4762 (DIN 912) A2-70
8 颗对称奥氏体不锈钢内六角螺钉 ISO 4762 (DIN 912) A2-70

DIMENSIONAL TOLERANCES • 尺寸与形位公差
Bore ISO 286-2 H8 • Keyway DIN 6885-1 P9 • OD h13 • Length js14
内孔公差 H8 • 平键槽公差 P9 • 外径 h13 • 总长 js14

SURFACE ROUGHNESS & SPEED • 表面粗糙度与最高转速
Surface Finish Rz 16 µm (Ra 3.2 µm) • Max. Speed 4,000 min^{-1} (rpm)
表面粗糙度 Rz 16 微米 • 许用最高工作转速 4,000 转/分钟

DESIGN & MOUNTING FEATURE • 结构与安装优势
Two-piece radial split clamping design allows radial assembly & disassembly without shifting adjacent shafts or drive components.
分体式双半径向夹紧结构，无需移动电机或轴系即可径向安装与拆卸，维护便捷。

DIMENSIONAL & PERFORMANCE DATA TABLE • 尺寸与扭矩参数表

Material: X5CrNi18-10 Stainless Steel (EN 1.4301 / AISI 304) | Fasteners: 8 × ISO 4762 (DIN 912) A2-70

Model 型号	Product Code 产品代码	Bore $D1^{H8}$ 内孔 [mm]	OD de^{h13} 外径 [mm]	Clearance do 螺钉回转径 [mm]	Length A^{js14} 总长 [mm]	Nominal Torque T_{KN} 额定扭矩 [Nm]	Screw Pitch C 螺钉孔距 [mm]	Keyway E^{P9} 键槽宽 [mm]	Clamping Screws • 锁紧螺钉 (8 × ISO 4762 (DIN 912) A2-70)			Mass 质量 [kg]
									Qty n 数量	Size 规格	Tightening T_S 锁紧扭矩 [Nm]	
MK-RC2 6-SS	SSMKRC2-006	6	18	21.5	30	25	5.9	2	8	M3 × 8	1.1	0.05
MK-RC2 8-SS	SSMKRC2-008	8	24	27.1	35	40	9.0	2	8	M3 × 10	1.1	0.10
MK-RC2 10-SS	SSMKRC2-010	10	29	33.0	45	90	10.6	3	8	M4 × 12	2.5	0.18
MK-RC2 12-SS	SSMKRC2-012	12	29	33.0	45	90	10.6	4	8	M4 × 12	2.5	0.18
MK-RC2 14-SS	SSMKRC2-014	14	34	39.4	50	160	12.0	5	8	M5 × 16	5.4	0.27
MK-RC2 15-SS	SSMKRC2-015	15	34	39.4	50	160	12.0	5	8	M5 × 16	5.4	0.27
MK-RC2 16-SS	SSMKRC2-016	16	34	39.4	50	160	12.0	5	8	M5 × 16	5.4	0.26
MK-RC2 20-SS	SSMKRC2-020	20	42	48.9	65	300	15.4	6	8	M6 × 16	9.6	0.52
MK-RC2 25-SS	SSMKRC2-025	25	45	51.5	75	325	16.9	8	8	M6 × 16	9.6	0.62
MK-RC2 30-SS	SSMKRC2-030	30	53	58.7	83	400	20.9	8	8	M6 × 18	9.6	0.92
MK-RC2 35-SS	SSMKRC2-035	35	67	74.7	95	925	26.7	10	8	M8 × 25	23.0	1.88
MK-RC2 40-SS	SSMKRC2-040	40	77	84.0	108	1100	31.8	12	8	M8 × 25	23.0	2.71
MK-RC2 50-SS	SSMKRC2-050	50	85	94.2	124	1875	34.1	14	8	M10 × 25	46.0	3.52

ENGINEERING & MOUNTING GUIDELINES • 工程选型与安装说明

1. Alignment Requirement • 对中要求: Rigid couplings do not compensate for radial, angular, or axial shaft misalignment. Ensure coaxial shaft alignment within ≤ **0.02 mm TIR** prior to tightening.
2. Progressive Torque Tightening • 螺钉对称锁紧: Tighten all socket head cap screws (**8 × ISO 4762 (DIN 912) A2-70**) progressively in a cross/even sequence using a calibrated torque wrench to the specified tightening torque **T_S [Nm]**.

RECOMMENDED SHAFT FIT & APPLICATIONS • 推荐轴配合公差与典型应用

Shaft Tolerance • 推荐轴径公差: ISO 286-2 h6 / k6 (precision drive shafts) or **h7** (general machinery); keyway acc. to **DIN 6885-1 JS9 / P9**.
Typical Applications • 典型应用领域: Food & beverage processing, pharmaceutical filling lines, cleanroom automation, marine machinery, and corrosive chemical washdown environments.（食品饮料机械、医药灌装线、洁净室自动化设备、船舶机械及酸碱清洗耐腐蚀工况。）