MISHKIN

Curved-Jaw Elastomeric Couplings • 梅花形弹性体爪式联轴器总览

Torsionally Flexible Fail-Safe Power Transmission & Zero-Backlash Servo Couplings acc. to DIN 740-2

EUROPEAN STANDARD • 欧洲标准体系
DIN 740-2 • ISO 286-2 H7 • DIN 6885-1 JS9

MISHKIN CURVED-JAW COUPLING FAMILY • 米什金梅花形爪式联轴器家族



92 Shore A (Yellow) Standard Dampening • 通用减振型
98 Shore A (Red) High Torque • 高扭矩型
64 Shore D (Green) High Rigidity • 高刚性重载型
80 Shore A (Blue) Precision Servo • 精密测量型

ENGINEERING DESIGN PRINCIPLE • 核心工程设计原理

1. Compact High-Torque Density: MISHKIN **MK-JC** and **MK-JCS** curved-jaw couplings feature compact radial dimensions, low moment of inertia, and high torque-to-weight ratio—improving dynamic running quality and damping prime-mover torque fluctuations.

1. 结构紧凑、高扭矩密度： 米什金 **MK-JC** 与 **MK-JCS** 系列梅花形弹性体爪式联轴器具有尺寸紧凑、重量轻、转动惯量小、传递扭矩高的特点，能有效改善机械系统的运行平稳性并吸收原动机不均匀运转产生的冲击。

2. Fail-Safe Torsionally Flexible Transmission: As torsionally flexible couplings with positive mechanical fail-safe interlocking jaws, they effectively dampen operational vibrations and shock loads while compensating for axial (ΔK_a), radial (ΔK_r), and angular (ΔK_w) shaft misalignments.

2. 扭向弹性与失效保护功能： 具备机械爪齿互锁的失效保护（Fail-Safe）功能，有效阻尼和衰减运行中的振动与冲击，同时补偿轴向、径向与角向安装偏差。

3. Pure Compressive Stress via Concave Curved Jaws: Unlike conventional straight-jaw couplings whose spiders suffer from bending and shear wear, MISHKIN concave curved jaws subject the polyurethane spider teeth strictly to compressive stress—eliminating edge stress concentration, extending service life, and supporting up to **5°** max torsional angle in horizontal or vertical installations.

3. 渐开线凹面爪齿纯受压设计： 普通直爪联轴器的弹性体易受弯曲与剪切应力而早期磨损；米什金采用凹面弧形爪齿设计，使聚氨酯（TPU）梅花弹性体仅受纯压力作用，彻底避免齿面应力集中，承受载荷更高、寿命倍增，最大扭转角达 **5°**，支持水平或立式安装。

MISHKIN JAW COUPLING SERIES MATRIX • 米什金爪式联轴器全系列选型导览表

European Functional Nomenclature • 欧洲功能化编码体系

MISHKIN Series 米什金系列代号	European Designation 欧洲标准英文名称	Chinese Designation 中文标准名称	Backlash Class 齿隙特性	Size Range 规格范围	Rated Torque T_{KN} 额定扭矩范围 [Nm]	Catalog Pages 所在页码
MK-JC	Standard Curved-Jaw Elastomeric Coupling (Types A / B / C / BZ)	标准型梅花形弹性体爪式联轴器	Standard (With Backlash)	14 – 180	**7.5 – 35,000**	**P.02 – P.10**
MK-JC-SJ	Double-Cardan Two-Section Spacer Jaw Coupling	双节式长跨距大补偿梅花联轴器	Standard (With Backlash)	19 – 90	**10 – 3,600**	**P.11**
MK-JC-FL	Heavy-Duty Flange-Mounted Jaw Coupling (FA / FB / FC / FD / FE / FF)	重型法兰式径向免移轴梅花联轴器	Standard (With Backlash)	24 – 180	**35 – 35,000**	**P.12 – P.13**
MK-JC-ZD	Jaw Coupling with Brake Drum (ZDG) / Brake Disc (ZDP)	制动鼓 / 制动盘式梅花形爪式联轴器	Standard (With Backlash)	38 – 125	**190 – 12,500**	**P.14**
MK-JC-DK	Single-Slit Radial Clamping Jaw Coupling	单开槽夹紧型梅花形爪式联轴器	Standard (With Backlash)	19 – 90	**10 – 3,600**	**P.15**
MK-JCS	Zero-Backlash Preloaded Servo Jaw Coupling (Set-Screw Type A / B)	无齿隙预压型精密伺服梅花联轴器（紧定型）	**Zero-Backlash (Preloaded)**	5 – 90	**0.3 – 4,500**	**P.16 – P.26**
MK-JCS-KC / DK	Zero-Backlash Split / Single-Slit Clamping Servo Jaw Coupling	无齿隙双开槽 (KC) / 单开槽 (DK) 夹紧型伺服联轴器	**Zero-Backlash (Preloaded)**	9 – 90	**3.0 – 4,500**	**P.27 – P.28**
MK-JCS-ZT	Zero-Backlash Integrated Taper Clamping Ring Servo Coupling (AL / S)	无齿隙铝质 (ZT-AL) / 钢质 (ZT-S) 胀紧套式主轴联轴器	**Zero-Backlash (Preloaded)**	14 – 90	**7.5 – 4,500**	**P.29 – P.30**

MISHKIN

Product Characteristics, Merits & Coding • 产品技术特点、核心优势与编码体系

European Material Grades, Heat Treatment, Surface Protection & Polyurethane Spider Classification

EUROPEAN STANDARD • 欧洲标准体系
DIN 740-2 • ISO 286-2 H7 • DIN 6885-1 JS9

TECHNICAL CHARACTERISTICS • 产品技术特点

1. COMPACT STRUCTURE & HIGH TORQUE • 结构紧凑与高扭矩
Small envelope dimensions, low weight, and high power density effectively improve mechanical running stability and absorb prime-mover shock loads.
具有结构尺寸小、重量轻、传递扭矩高的特点，能有效改善机械运行品质和稳定性，吸收原动机不均匀运转产生的冲击。

2. FAIL-SAFE & 3-AXIS MISALIGNMENT • 失效保护与三向纠偏
Fail-safe interlocking jaws dampen operational vibrations and compensate for axial, radial, and angular shaft misalignments.
具有失效保护功能，能有效地阻尼和减少运动过程中的振动和冲击，有效纠正轴向、径向和角向的安装偏差。

3. MAX TORSIONAL ANGLE & ORIENTATION • 扭转角与安装方向
Coupling sizes MK-JC 14 and above achieve a maximum torsional angle up to 5° and support both horizontal and vertical installation.
大于等于 14 规格的爪式联轴器最大扭转角均能达到 5°，可水平安装，也可立式安装。

ENGINEERING MERITS • 产品核心优势

1. GERMAN TPU ELASTOMER & MASS PRODUCTION • 德国TPU原料与规模化制造
High-precision CNC machined metallic hubs paired with in-house molded spiders using German premium thermoplastic polyurethane (TPU) elastomer.
历经多年研发为国内外行业龙头大批量配套；金属件批量精密制造，弹性体采用德国高品质 TPU 材料自产。

2. ATEX EXPLOSION PROTECTION & 150% OVERLOAD • 防爆认证与瞬时过载能力
Certified for explosion-proof drive environments; reliably transmits instantaneous peak overload torques exceeding 150% of nominal rated torque.
通过防爆安全认证；瞬间超过最大扭矩值 50% 仍能可靠满足传动需求。

3. THERMAL ENDURANCE & RIGOROUS TEST BENCH • 高低温寿命测试与完备检测
Validated under high/low temperature endurance life testing (`-40°C` to `+120°C`) on dedicated dynamic coupling test benches at full rated load.
通过高低温极限寿命测试，在最大载荷下仍能确保长寿命使用；配备完善的联轴器动态检测平台。

SHAFT CONNECTION METHODS • 联轴器轴孔联接方式

- **Clamping Hub (DK / KC):** Single-slit or double-slit friction clamping hub with or without keyway.
- **Conical Locking Assembly (ZT):** Integrated taper clamping ring for high-torque keyless shrink fit.
- **Standard Bore & Keyway:** Finished bore **ISO 286-2 H7** with parallel keyway **DIN 6885-1 JS9** + set screw (**ISO 4029 / DIN 916**).

联接方式涵盖：单/双开槽夹紧式（带键槽或不带键槽）、一体式胀紧套联接（ZT）、标准平键孔（ISO H7 + DIN 6885-1 JS9）配紧定螺钉。

SERIES CLASSIFICATION & APPLICATIONS • 类型与应用领域划分

- **MK-JC Series (Original GR — With Backlash):** Designed for general industrial power transmission, pumps, compressors, hydraulic power packs, and conveyors.
- **MK-JCS Series (Original GS — Zero Backlash):** Preloaded spider design for precision servo drives, CNC machine tool axes, encoders, and indexing tables.

类型划分：**MK-JC**（原 GR 有齿隙系列）用于通用工业传动；**MK-JCS**（原 GS 无齿隙系列）用于精密传动与高动态伺服定位行业。

ORDERING CODE NOMENCLATURE TABLE • 种类、材质、热处理、表面处理及弹性体硬度代码表

MISHKIN Standardized Code System • 米什金标准编码体系

Coupling Series Code 联轴器种类代码 (Type)	Hub Material Code 金属轴套材料代码 (Material)	European Material Standard 对应欧洲材料牌号 (EN / DIN)	Heat Treatment Code 热处理代码 (Heat Treating)	Surface Finish Code 表面处理代码 (Surface Treatment)	S 弹
MK-JC (GR) Standard With Backlash • 有齿隙标准型	**S : Carbon / Alloy Steel** 钢件：S	C45E (EN 1.1191) / 42CrMo4 (EN 1.7225)	**T** : Quenched & Tempered 调质处理：T	**B** : Black Oxide (DIN 50938) 发黑防锈：B	92
MK-JCS (GS) Zero-Backlash Servo • 无齿隙精密型	**C : Cast Iron (GG / GGG)** 铸件：C	EN-GJL-250 (GG25) / EN-GJS-400-15 (GGG40)	**H** : Annealed 退火处理：H	**P** : Manganese Phosphate (EN ISO 9717) 磷化处理：P	9
—	**A / AL : Aluminum Alloy** 高强铝件：A / AL	EN AW-7075 T6 / EN AW-6061 T6 / AlSi12	**Z** : Normalized 正火处理：Z	**G** : Precision Polished 光饰抛光：G	6
—	**X / SS : Stainless Steel** 不锈钢件：X / SS	X5CrNi18-10 (EN 1.4301 / AISI 304)	**D** : Passivated (EN 2516) 钝化处理：D	**Q** : Industrial Spray Coat • 喷漆：Q **Y** : Anodized (ISO 7599) • 阳极氧化：Y	8 Lo

MISHKIN

Structure Coding & Misalignment Parameters • 结构型式代码与纠偏功能参数

Permissible Axial (ΔL), Radial (ΔR), and Angular (ΔLW) Shaft Deviations acc. to DIN 740-2 (at n = 1,500 min⁻¹)

EUROPEAN STANDARD • 欧洲标准体系
DIN 740-2 • ISO 286-2 H7 • DIN 6885-1 JS9

HUB STRUCTURE CODING • 产品结构型式代码

STANDARD HUBS • 标准型联轴器: A, B, C (BZ)
Type A / B (Standard Hub Lengths) • Type C / BZ (Lengthened Hub)
标准轴套 A 型、加大型 B 型、加长型 C (BZ) 型

CLAMPING HUBS • 开槽夹紧式: DK, KC
DK: Single-Slit Clamping Hub • KC: Double-Slit Clamping Hub
单开槽夹紧式联轴器：DK | 双开槽夹紧式联轴器：KC

FLANGE & SPACER HUBS • 法兰与双节式: FA–FF, SJ
FA, FB, FC, FD, FE, FF (Heavy-Duty Flange) • SJ (2-Section Spacer)
法兰联轴器：FA, FB, FC, FD, FE, FF | 双节式联轴器：SJ

LOCKING & BRAKE HUBS • 胀紧套与制动式: ZT, ZD
ZT: Conical Taper Clamping Ring • ZD: Brake Drum (ZDG) / Disc (ZDP)
胀套式联轴器：ZT | 制动鼓/制动盘式联轴器：ZD

3-AXIS MISALIGNMENT COMPENSATION • 轴向、径向与角向纠偏示意图

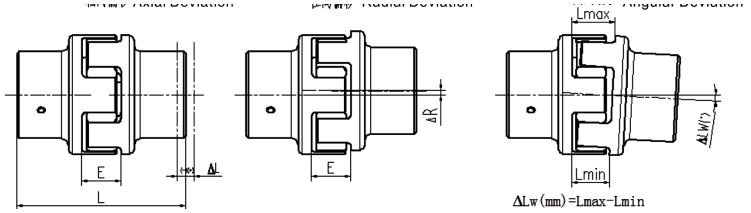

Axial Deviation ΔL [mm] • 轴向偏移 **Radial Deviation ΔR [mm]** • 径向偏移
Angular Deviation ΔLW [° / mm] = $L_{max} - L_{min}$ • 角向偏移

PERMISSIBLE MISALIGNMENT FOR 92 SHORE A & 98 SHORE A SPIDERS • 92SHA / 98SHA 弹性体纠偏能力表 (n = 1,500 min⁻¹)

Polyurethane (TPU) 92 ShA (Yellow) / 98 ShA (Red)

MK-JC Size 规格型号	14	19	24	28	38	42	48	55	65	75	90	100	110	125	140	160	180
Max. Axial ΔL [mm] 最大轴向偏差	-0.5 +1.0	-0.5 +1.2	-0.5 +1.4	-0.7 +1.5	-0.7 +1.8	-1.0 +2.0	-1.0 +2.1	-1.0 +2.2	-1.0 +2.6	-1.5 +3.0	-1.5 +3.4	-1.5 +3.8	-2.0 +4.2	-2.0 +4.6	-2.0 +5.0	-2.5 +5.7	-3.0 +6.4
Max. Radial ΔR [mm] 最大径向偏差	0.17	0.20	0.22	0.25	0.28	0.32	0.36	0.38	0.42	0.48	0.50	0.52	0.55	0.60	0.62	0.64	0.68
Max. Angular ΔLW [°] 最大角向偏差 (°)	1.2	1.2	0.9	0.9	1.0	1.0	1.1	1.1	1.2	1.2	1.2	1.2	1.3	1.3	1.2	1.2	1.2
Chordal ΔLW [mm] 角向弦长差 L_{max}-L_{min}	0.67	0.82	0.85	1.05	1.35	1.70	2.00	2.30	2.70	3.30	4.30	4.80	5.60	6.50	6.60	7.60	9.00

PERMISSIBLE MISALIGNMENT FOR 64 SHORE D SPIDER • 64SHD 高刚性弹性体纠偏能力表 (n = 1,500 min⁻¹)

Polyurethane (TPU / Hytrel) 64 ShD (Green)

MK-JC Size 规格型号	14	19	24	28	38	42	48	55	65	75	90	100	110	125	140	160	180
Max. Axial ΔL [mm] 最大轴向偏差	-0.5 +1.0	-0.5 +1.2	-0.5 +1.4	-0.7 +1.5	-0.7 +1.8	-1.0 +2.0	-1.0 +2.1	-1.0 +2.2	-1.0 +2.6	-1.5 +3.0	-1.5 +3.4	-1.5 +3.8	-2.0 +4.2	-2.0 +4.6	-2.0 +5.0	-2.5 +5.7	-3.0 +6.4
Max. Radial ΔR [mm] 最大径向偏差	0.11	0.13	0.15	0.18	0.21	0.23	0.25	0.27	0.30	0.34	0.36	0.37	0.40	0.43	0.45	0.46	0.49
Max. Angular ΔLW [°] 最大角向偏差 (°)	1.1	1.1	0.8	0.8	0.9	0.9	1.0	1.0	1.1	1.1	1.1	1.1	1.2	1.2	1.1	1.1	1.1
Chordal ΔLW [mm] 角向弦长差 L_{max}-L_{min}	0.57	0.76	0.76	0.90	1.25	1.40	1.80	2.00	2.50	3.00	3.80	4.30	5.30	6.00	6.10	7.10	8.00

SPEED & SIMULTANEOUS MISALIGNMENT NOTE • 转速与复合偏差修正说明

Values listed above apply at reference speed **n = 1,500 min⁻¹ (rpm)**. If radial (ΔR) and angular (ΔLW) misalignments occur simultaneously, their percentage shares of the maximum permissible values must sum to ⩽ **100%**.

PRECISION ALIGNMENT BENEFIT • 精密对中优势

Accurate laser or dial-indicator shaft alignment during installation minimizes cyclic flexing of the polyurethane spider, significantly reducing bearing reaction loads and extending spider service life.

MISHKIN

Spider Mounting Dimensions & Torque Selection • 安装尺寸与联轴器工程选型计算

Axial Spider Clearance Dimensions (E, t) & DIN 740-2 Service Factor Calculation Method

EUROPEAN STANDARD • 欧洲标准体系
DIN 740-2 • ISO 286-2 H7 • DIN 6885-1 JS9

AXIAL MOUNTING CLEARANCE CAD • 轴向安装间隙尺寸图

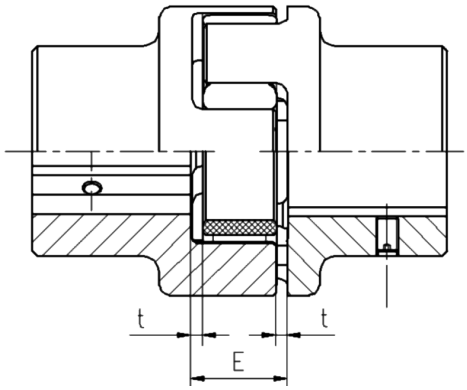

E [mm] Axial Hub Gap • 两轴套端面轴向间距
t [mm] Spider Web Clearance • 弹性体端面轴向游隙

DIN 740-2 COUPLING SELECTION FORMULAS • 联轴器选型计算公式

1. NOMINAL DRIVE TORQUE CALCULATION • 额定驱动扭矩计算

T_N [Nm] = 9550 × P [kW] / n [min^{-1} (rpm)]

式中：P 为电机额定功率 [kW]；n 为工作转速 [r/min]；T_N 为系统名义额定扭矩 [Nm]。

2. PEAK & SHOCK LOAD VERIFICATION • 冲击扭矩载荷校核 (DIN 740-2)

$T_{Kmax} \geqslant 2.0 \times T_N \times M_A \times S_A \times S_Z \times S_t$ and $T_{KN} \geqslant T_N \times S_t$

所选联轴器样本允许的最大扭矩 T_{Kmax} 必须大于等于计入各项工况安全系数后的峰值冲击扭矩。

3. DRIVE-END INERTIA RATIO FACTOR M_A • 主动端转动惯量系数

$M_A = J_L / (J_A + J_L)$ (where J_A = Driving Side Inertia, J_L = Driven Load Side Inertia)

M_A 为主动端与从动端转动惯量分配系数；选型时请充分考虑温度系数 S_t、启动频率系数 S_Z 及冲击载荷系数 S_A/S_L。

MANDATORY AXIAL MOUNTING DIMENSIONS (E & t) • 轴向安装间距 E 与弹性体端面间隙 t 标准尺寸表 [mm]

Maintain Dimension E During Assembly • 安装时必须保证尺寸 E

MK-JC Size 规格型号	14	19	24	28	38	42	48	55	65	75	90	100	110	125	140	160	180
Hub Gap E [mm] 轴套间距 E	13	16	18	20	24	26	28	30	35	40	45	50	55	60	65	75	85
Clearance t [mm] 端面间隙 t	1.5	2.0	2.0	2.5	3.0	3.0	3.5	4.0	4.5	5.0	5.5	6.0	6.5	7.0	7.5	9.0	10.5

TEMPERATURE FACTOR S_t • 环境温度安全系数表

Ambient Temperature near Elastomer Spider • 弹性体工作环境温度

Ambient Temp. T_{amb} 环境温度	−30°C	−30°C ~ +30°C	+40°C	+50°C	+60°C	+70°C	+80°C	+90°C	+100°C	+110°C	+120°C
Factor S_t 温度系数 S_t	1.0	1.0	1.1	1.2	1.3	1.5	1.6	1.8	2.1	2.5	3.0

START FREQUENCY FACTOR S_Z • 启动频率系数表

Starts per Hour [1/h] 每小时启动次数	⩽ 100	200	400	800
Factor S_Z 启动频率系数	1.0	1.2	1.4	1.6

SHOCK LOAD FACTOR S_A / S_L • 冲击载荷系数表

Load Duty Class 冲击载荷等级	Slight Shock 轻微冲击载荷	Moderate Shock 一般冲击载荷	Heavy Shock 严重冲击载荷
Factor S_A / S_L 冲击系数	1.5	1.8	2.5

MISHKIN

Polyurethane Spider Technical Parameters • 聚氨酯梅花弹性体技术参数表

Rated Torque (TKN), Peak Torque (TKmax), Vibratory Torque (TKW) & Max Speeds across 92 ShA, 98 ShA & 64 ShD

EUROPEAN STANDARD • 欧洲标准体系
DIN 740-2 • ISO 286-2 H7 • DIN 6885-1 JS9

ELASTOMER SPIDER TORQUE, SPEED & TORSIONAL ANGLE TABLE • 弹性体扭矩、最高转速与扭转角参数表

Dynamic Balance Required for v > 30 m/s (ISO 21940-11 G6.3)

Model 型号	Max Speed n_{max} [min⁻¹] 许用最高转速 [r/min]		Elastomer Spider Torque Ratings • 弹性体传递扭矩 [Nm]									Torsional Angle ϕ 扭转角 [°]			
			92 Shore A (Yellow • 黄色)			98 Shore A (Red • 红色)			64 Shore D (Green • 绿色)			92 / 98 ShA		64 ShD	
	v=35 m/s Cast Iron 铸铁	v=40 m/s Steel 钢件	Rated T_{KN} 额定	Max T_{Kmax} 最大	Alt. T_{KW} 交变	Rated T_{KN} 额定	Max T_{Kmax} 最大	Alt. T_{KW} 交变	Rated T_{KN} 额定	Max T_{Kmax} 最大	Alt. T_{KW} 交变	at T_{KN}	at T_{Kmax}	at T_{KN}	at T_{Kmax}
MK-JC 14	22,200	25,400	**7.5**	15	2.0	**12.5**	25	3.3	**16.0**	32	4.2	6.4°	10°	4.5°	7.0°
MK-JC 19	16,700	19,000	**10.0**	20	2.6	**17.0**	34	4.4	**21.0**	42	5.5	3.2°	5.0°	2.5°	3.6°
MK-JC 24	12,100	13,800	**35.0**	70	9.1	**60.0**	120	16.0	**75.0**	150	19.5	3.2°	5.0°	2.5°	3.6°
MK-JC 28	10,100	11,500	**95.0**	190	25.0	**160**	320	42.0	**200**	400	52.0	3.2°	5.0°	2.5°	3.6°
MK-JC 38	8,300	9,500	**190**	380	49.0	**325**	650	85.0	**405**	810	105	3.2°	5.0°	2.5°	3.6°
MK-JC 42	7,000	8,000	**265**	530	69.0	**450**	900	117	**560**	1,120	146	3.2°	5.0°	2.5°	3.6°
MK-JC 48	6,350	7,250	**310**	620	81.0	**525**	1,050	137	**655**	1,310	170	3.2°	5.0°	2.5°	3.6°
MK-JC 55	5,550	6,350	**410**	820	107	**685**	1,370	178	**825**	1,650	215	3.2°	5.0°	2.5°	3.6°
MK-JC 65	4,950	5,650	**625**	1,250	163	**940**	1,880	244	**1,175**	2,350	306	3.2°	5.0°	2.5°	3.6°
MK-JC 75	4,150	4,750	**1,280**	2,560	333	**1,920**	3,840	499	**2,400**	4,800	624	3.2°	5.0°	2.5°	3.6°
MK-JC 90	3,300	3,800	**2,400**	4,800	624	**3,600**	7,200	936	**4,500**	9,000	1,170	3.2°	5.0°	2.5°	3.6°
MK-JC 100	2,950	3,350	**3,300**	6,600	858	**4,950**	9,900	1,287	**6,185**	12,370	1,608	3.2°	5.0°	2.5°	3.6°
MK-JC 110	2,600	2,950	**4,800**	9,600	1,248	**7,200**	14,400	1,872	**9,000**	18,000	2,340	3.2°	5.0°	2.5°	3.6°
MK-JC 125	2,300	2,600	**6,650**	13,300	1,729	**10,000**	20,000	2,600	**12,500**	25,000	3,250	3.2°	5.0°	2.5°	3.6°
MK-JC 140	2,050	2,350	**8,550**	17,100	2,223	**12,800**	25,600	3,328	**16,000**	32,000	4,160	3.2°	5.0°	2.5°	3.6°
MK-JC 160	1,800	2,050	**12,800**	25,600	3,328	**19,200**	38,400	4,992	**24,000**	48,000	6,240	3.2°	5.0°	2.5°	3.6°
MK-JC 180	1,550	1,800	**18,650**	37,300	4,849	**28,000**	56,000	7,280	**35,000**	70,000	9,100	3.2°	5.0°	2.5°	3.6°

PERIPHERAL SPEED & DYNAMIC BALANCING • 圆周线速度与动平衡要求

For peripheral speeds exceeding **v > 30 m/s**, dynamic balancing (acc. to **ISO 21940-11 G6.3 / G2.5**) is required. For peripheral speeds **v > 35 m/s**, always select **C45E Carbon Steel** or **EN-GJS-400-15 (GGG40) Nodular Cast Iron** hubs.
注：对于圆周速度超过 V=30m/s，需要做动平衡；对于圆周速度超过 V=35m/s，建议使用钢件或者球墨铸铁轴套。

POLYURETHANE SPIDER VISUAL IDENTIFICATION • 标准梅花弹性体实物与颜色标识



92 SHORE A • YELLOW (黄色标准弹性体)

Material: Cast Polyurethane (PUR)
Continuous Temp.: −40°C to +90°C
Short-Term Peak: up to **+120°C**
Application: High damping capacity for standard electric motor, pump & compressor drives.
工作温度：-40~+90°C（瞬间高温 120°C），通用减振传动首选。

98 SHORE A • RED (红色高扭矩弹性体)

Material: Cast Polyurethane (PUR)
Continuous Temp.: −30°C to +90°C
Short-Term Peak: up to **+120°C**
Application: ~60% higher torque rating and higher torsional stiffness for heavy-duty industrial drives.
工作温度：-30~+90°C（瞬间高温 120°C），高扭矩高刚性场合。

64 SHORE D • GREEN (绿色高刚性弹性体)

Material: Hytrel® / High-Modulus TPU
Continuous Temp.: −30°C to +110°C
Short-Term Peak: up to **+130°C**
Application: Maximum torsional rigidity, high thermal resistance & oil/chemical resistance.
工作温度：-30~+110°C（瞬间高温 130°C），耐高温高刚性重载。

MISHKIN

Standard Finished Bore & Keyway Selection Matrix • 基本型系列标准成品圆孔公差与孔径范围表

Finished Bore Tolerance acc. to ISO 286-2 H7 • Parallel Keyway acc. to DIN 6885-1 JS9 • With ISO 4029 Set Screw

EUROPEAN STANDARD • 欧洲标准体系
DIN 740-2 • ISO 286-2 H7 • DIN 6885-1 JS9

MK-JC STANDARD FINISHED BORE AVAILABILITY MATRIX (Ø6 – Ø100 mm) • 标准成品圆孔可加工孔径矩阵表

● = Standard Finished Bore (ISO H7 + DIN 6885-1 JS9 Keyway + Set Screw)

Size 规格	Mat. 材质	Hub 件号	Finished Bore Diameter d [mm] (ISO 286-2 H7) • Keyway acc. to DIN 6885-1 JS9 with Set Screw (ISO 4029 / DIN 916) • 成品孔径 [mm]																																				
			6	8	9	10	11	12	14	15	16	17	18	19	20	22	24	25	26	28	30	32	35	38	40	42	45	48	50	55	60	65	70	75	80	85	90	100
14	Sint	B	•	•	•	•	•	•	•	•	•																											
19	Sint	B		•					•		•			•	•	•	•																					
14	Al-H	B	•	•	•	•	•	•	•	•	•																											
14	St	B	•	•	•	•	•	•	•	•	•																											
19	Al-D	A	•	•	•	•	•	•	•	•	•	•	•	•																								
19	Al-D	B												•	•	•	•																					
19	St	B		•	•	•	•	•	•	•	•	•	•	•	•	•	•	•																				
24	Al-D	A			•	•	•	•	•	•	•	•	•	•	•	•	•																					
24	Al-D	B														•	•	•	•	•																		
24	St	B				•	•	•	•	•	•	•	•	•	•	•	•	•	•	•	•	•																
28	Al-D	A				•	•	•	•	•	•	•	•	•	•	•	•	•	•	•																		
28	Al-D	B																		•	•	•	•	•														
28	St	B						•	•	•	•	•	•	•	•	•	•	•	•	•	•	•	•	•	•													
38	St	A												•	•	•	•	•	•	•	•	•	•	•	•	•	•	•										
38	St	B							•	•	•	•	•	•	•	•	•	•	•	•	•	•	•	•	•	•	•											
38	GG25	A						•	•	•	•	•	•	•	•	•	•	•	•	•	•	•	•	•														
38	GG25	B																						•	•	•	•											
42	St	A													•	•	•	•		•	•	•	•	•	•	•	•	•	•	•								
42	St	B																		•	•	•		•		•	•	•	•									
42	GG25	A							•		•		•	•	•	•	•	•	•	•	•	•	•	•	•	•												
42	GG25	B																								•	•	•	•	•								
48	St	A													•			•			•	•	•	•	•	•	•	•	•	•	•							
48	St	B																				•		•	•	•	•	•	•	•								
48	GG25	A								•			•	•	•	•	•	•	•	•	•	•	•	•	•	•	•	•										
48	GG25	B																										•	•	•	•							
55	St	A																•			•	•	•	•	•	•	•	•	•	•	•	•	•					
55	St	B																							•	•	•	•	•	•	•	•						
55	GG25	A													•	•	•	•		•	•	•	•	•	•	•	•	•	•	•								
55	GG25	B																												•	•	•	•					
65	St	A																			•	•	•	•	•	•	•	•	•	•	•	•	•	•				
65	GG25	A														•	•	•		•	•	•	•	•	•	•	•	•	•	•	•	•						
65	GG25	B																														•	•	•				
75	St	A																					•		•	•	•	•	•	•	•	•	•	•	•	•		
75	St	B																								•	•	•	•	•	•	•	•	•				
75	GG25	A																			•	•	•	•	•	•	•	•	•	•	•	•	•					
90	St	A																							•		•		•	•	•	•	•	•	•	•	•	•
90	GG25	A																							•	•	•	•	•	•	•	•	•	•	•	•	•	•

MATERIAL CODE LEGEND • 轴套材质代号说明 (EN / DIN Standards)

- **Sint:** Sintered Steel (PM Steel acc. to ISO 5755) • 粉末冶金烧结钢
- **Al-H / Al-D:** Wrought / Die-Cast Aluminum Alloy (EN AW-6061 / EN AC-AlSi12) • 铝合金压铸/锻件
- **GG25:** Grey Cast Iron **EN-GJL-250** (EN 1561) • 灰铸铁 HT250 | **St:** Carbon Steel **C45E (EN 1.1191)** • 优质碳素钢

CUSTOM BORE & KEYWAY OPTIONS • 定制内孔与键槽服务

In addition to metric cylindrical bores (**ISO 286-2 H7**) with parallel keyways (**DIN 6885-1 JS9**), MISHKIN supplies imperial (inch) bores, taper bores (1:10 / 1:8), and DIN 5480 / SAE involute spline bores upon request.
除上表标准公制成品圆孔外，米什金可根据欧洲客户图纸定制锥孔、英制孔及花键孔。

Jaw Coupling Technical Selection & Inquiry Form • 米什金爪式联轴器技术选型与询价表

MISHKIN IMPORT & EXPORT CO., LTD • Technical Application Data Sheet for European OEMs & Distributors

EUROPEAN STANDARD • 欧洲标准体系
DIN 740-2 • ISO 286-2 H7 • DIN 6885-1 JS9

MISHKIN IMPORT & EXPORT CO., LTD • 米什金精密机械传动

Technical Coupling Selection & Engineering Inquiry Form • 梅花形爪式联轴器工况选型表

Customer Info 客户信息

Company Name / 公司名称: _____

Annual Demand / 年需求量: _____

Contact Person / 联系人: _____

Industry / 所属行业: _____

Coupling Specification 联轴器规格与结构选型

Series Specification / 联轴器系列: ☐ **MK-JC** (Standard Curved-Jaw • 有齿隙标准型) ☐ **MK-JCS** (Zero-Backlash Servo • 无齿隙精密伺服型)

Driving Hub (Left) / 主动端左轴套: ☐ Type A ☐ Type B ☐ Type C (BZ)

Driven Hub (Right) / 从动端右轴套: ☐ Type A ☐ Type B ☐ Type C (BZ)

Hub Material / 轴套材料: ☐ Carbon Steel **C45E (EN 1.1191)** / 钢件 ☐ Cast Iron **EN-GJL-250 / EN-GJS-400-15** / 铸铁 ☐ Aluminum **EN AW-7075 / 6061** / 铝件 ☐ Stainless **EN 1.4301 (AISI 304)** / 不锈钢

MK-JC Hub Configuration / 标准系列结构形式: ☐ Standard Hub (A/B/C) ☐ **DK** Single-Slit Clamping (单开槽夹紧) ☐ **SJ** Double-Cardan 2-Section (双节式)
☐ **FL** Heavy-Duty Flange (法兰式 FA/FB/FC/FD/FE/FF) ☐ **ZDG / ZDP** Brake Drum / Brake Disc (制动鼓/制动盘式) ☐ Other / 其他: _____

MK-JCS Servo Hub Configuration / 无齿隙系列结构形式: ☐ Standard Set-Screw ☐ **DK** Single-Slit Clamping ☐ **KC** Double-Slit Clamping ☐ **ZT-AL / ZT-S** Integrated Taper Clamping Ring (胀紧套式)

Left Bore & Tolerance / 左轴孔及公差: Ø _____ mm (☐ ISO H7 ☐ Other: _____)

Right Bore & Tolerance / 右轴孔及公差: Ø _____ mm (☐ ISO H7 ☐ Other: _____)

Keyway Standard / 键槽标准 (DIN 6885-1): ☐ Without Keyway (无键槽) ☐ With Keyway acc. to **DIN 6885-1** (有平键槽) — Tolerance: ☐ **JS9** ☐ **P9** ☐ **N9** ☐ Other: _____

Surface Protection / 表面处理: ☐ Black Oxide (发黑) ☐ Phosphate (磷化) ☐ Anodized (阳极氧化)

Heat Treatment / 调质热处理 (Quenched & Tempered): ☐ Yes (是) ☐ No (否)

Polyurethane Spider / 梅花弹性体硬度: ☐ 80 ShA ☐ 92 ShA ☐ 98 ShA ☐ 64 ShD

Dynamic Balancing / 动平衡要求: ☐ Standard ☐ ISO 21940 G6.3 / G2.5

Prime Mover 电机/原动机参数

Motor Type / 电机类型: ☐ AC Servo Motor (伺服电机) ☐ VFD Inverter Motor (变频电机) ☐ 3-Phase Asynchronous Motor (三相异步电机) ☐ Other / 其他: _____

Rated Power / 额定功率 P: _____ kW

Operating Speed / 工作转速 n: _____ min^{-1} (rpm)

Operating Conditions 使用环境与工况

Low Ambient Temp. / 低温环境: ☐ −50°C ☐ −40°C ☐ −30°C ☐ −20°C ☐ −10°C ☐ 0°C ~ +30°C
High Ambient Temp. / 高温环境: ☐ +40°C ☐ +50°C ☐ +60°C ☐ +70°C ☐ +80°C ☐ +90°C ☐ +100°C ☐ +110°C ☐ +120°C

Start-Up Frequency / 启动频率 [starts/hour • 次/小时]: ☐ 0 – 100 ☐ > 100 – 200 ☐ > 200 – 400 ☐ > 400 – 800

Shock & Duty Classification / 冲击载荷类型: ☐ Slight / Uniform Load (轻微冲击 S_A=1.5) ☐ Moderate Shock (一般冲击 S_A=1.8) ☐ Heavy Shock (严重冲击 S_A=2.5)

Special Technical Remarks / 特殊技术要求与备注:
_____

MISHKIN IMPORT & EXPORT CO., LTD • 米什金进出口有限公司
Address: No. 4, Attachment OL-04, No. 79 Xiangsha Road, Huayang Street, Tianfu New Area, Chengdu, Sichuan Free Trade Zone, China
地址：中国（四川）自由贸易试验区成都天府新区华阳街道香沙路79号附OL-04-4号
Tel / WhatsApp: +86 18081107367
Email: sales@mishkinparts.com
Web: https://mishkinparts.com/

MISHKIN

Curved-Jaw Coupling — Aluminum Alloy Series • 标准型梅花形弹性体爪式联轴器（铝件系列）

Lightweight Die-Cast / Wrought Aluminum Hubs with Polyurethane Spider • Bore ISO H7 & Keyway DIN 6885-1 JS9

EUROPEAN STANDARD • 欧洲标准体系
DIN 740-2 • ISO 286-2 H7 • DIN 6885-1 JS9

PRODUCT VIEW • 铝质标准梅花联轴器实拍图



Hub Material: Aluminum Alloy (EN AC-AlSi12 / EN AW-6061)
Spider: Polyurethane (TPU 92/98 ShA, 64 ShD)

EUROPEAN TECHNICAL FEATURES • 产品技术特点与欧洲标准

1. UNIVERSAL INDUSTRIAL & HYDRAULIC APPLICATIONS • 广泛用于机械与液压领域
Ideal for hydraulic power units,bellhousing pump drives, light-to-medium industrial machinery, and automation conveyors.
广泛应用于各种通用机械、液压泵站及自动化传动领域；聚氨酯弹性体与金属爪盘配合，终身免维护。

2. MISALIGNMENT DAMPING & ELECTRICAL INSULATION • 减振纠偏与电气绝缘
Compensates for axial, radial, and angular shaft deviations while absorbing shock loads and providing complete electrical insulation.
有效补偿两轴相对偏移、缓冲减振，并具备良好的电气绝缘性能；轴向插入式装配，安装极简。

3. EUROPEAN BORE & KEYWAY TOLERANCES • 欧标成品孔与键槽公差
Finished bore tolerance acc. to ISO 286-2 H7; parallel keyway acc. to DIN 6885-1 JS9. Taper and inch bores available on request.
成品孔径公差严格按照 ISO 286-2 标准 H7，平键槽公差按照 DIN 6885-1 标准 JS9；另可定制锥孔与英制孔。

FUNDAMENTAL DIMENSIONS — ALUMINUM HUB SERIES (MK-JC 14 – MK-JC 55) • 铝件系列基本尺寸与紧定螺钉参数表

Unit: mm | Set Screw: ISO 4029 / DIN 916

Model 型号	Hub Part 部件型式	Finished Bore d 成品孔 (min–max)	Dimensions • 外形与结构尺寸 [mm]									Set Screw • 固定螺丝 (ISO 4029)		
			L	L1, L2	E	b	t	D	D1, D2	N	d3	Thread M 螺纹规格	Pos. S 孔位 [mm]	Torque T_A 锁紧 [Nm]
MK-JC 14	Type B	6 – 16	35	11	13	10	1.5	30	30	—	10	M4	5	1.5
MK-JC 19	Type A	6 – 19	66	25	16	12	2.0	41	32	20	18	M5	10	2.0
MK-JC 19	Type B	19 – 24	66	25	16	12	2.0	41	40	—	18	M5	10	2.0
MK-JC 24	Type A	9 – 24	78	30	18	14	2.0	56	40	24	27	M5	10	2.0
MK-JC 24	Type B	22 – 28	78	30	18	14	2.0	56	56	—	27	M5	10	2.0
MK-JC 28	Type A	10 – 28	90	35	20	15	2.5	66	48	28	30	M8	15	10
MK-JC 28	Type B	28 – 38	90	35	20	15	2.5	66	66	—	30	M8	15	10
MK-JC 38	Type A	12 – 48	114	45	24	18	3.0	80	66	37	38	M8	15	10
MK-JC 38	Type B	38 – 45	114	45	24	18	3.0	80	79	—	38	M8	15	10
MK-JC 42	Type A	14 – 42	126	50	26	20	3.0	95	75	40	46	M8	20	10
MK-JC 42	Type B	42 – 55	126	50	26	20	3.0	95	94	—	46	M8	20	10
MK-JC 48	Type A	15 – 48	140	56	28	21	3.5	105	85	45	51	M8	20	10
MK-JC 48	Type B	48 – 60	140	56	28	21	3.5	105	104	—	51	M8	20	10
MK-JC 55	Type A	20 – 55	160	65	30	22	4.0	120	98	52	60	M10	20	17
MK-JC 55	Type B	55 – 70	160	65	30	22	4.0	120	118	—	60	M10	20	17

HUB COMBINATION FLEXIBILITY • 轴套A/B部件自由组合

Type **A** (standard hub boss D1 < D) and Type **B** (full-diameter hub boss D2 ≈ D for larger shaft bores) can be combined freely as **A+A**, **A+B**, or **B+B** within the same coupling size.

SET SCREW LOCKING TORQUE • 紧定螺钉防松锁紧规范

All finished bores include a radial cup-point socket set screw (**ISO 4029 / DIN 916**) positioned over the keyway at distance **S**. Tighten to the specified torque **T_A [Nm]**.

MISHKIN

Curved-Jaw Coupling — Cast Iron & Steel Hubs
• 标准型梅花形弹性体爪式联轴器（铸件与钢件系列）

Cast Iron EN-GJL-250 (Sizes 38–90) / EN-GJS-400-15 (Sizes 100–180) & Carbon Steel C45E (Sizes 14–90)

EUROPEAN STANDARD • 欧洲标准体系
DIN 740-2 • ISO 286-2 H7 • DIN 6885-1 JS9

CAST IRON HUB SERIES (MK-JC 38 – MK-JC 180) • 铸件轴套基本尺寸参数表 (EN-GJL-250 / EN-GJS-400-15)

Sizes 38–90: EN-GJL-250 (HT250) | Sizes 100–180: EN-GJS-400-15 (QT400)

Model 型号	Part 部件	Bore d 成品孔 [mm]	L 总长	L1, L2 轴套长	E 间距	b 爪宽	t 间隙	D 外径	D1, D2 毂径	N 凸台长	d3 内腔径	Screw M 紧定螺钉	Pos. S 孔位	T_A [Nm] 锁紧扭矩
MK-JC 38	A	12 – 40	114	45	24	18	3.0	80	66	37	38	M8	15	10
MK-JC 38	B	38 – 48	114	45	24	18	3.0	80	79	—	38	M8	15	10
MK-JC 38	C	12 – 48	164	70	24	18	3.0	80	79	62	38	M8	15	10
MK-JC 42	A	14 – 45	126	50	26	20	3.0	95	75	40	46	M8	20	10
MK-JC 42	B	42 – 55	126	50	26	20	3.0	95	94	—	46	M8	20	10
MK-JC 42	C	14 – 55	176	75	26	20	3.0	95	94	65	46	M8	20	10
MK-JC 48	A	15 – 52	140	56	28	21	3.5	105	85	45	51	M8	20	10
MK-JC 48	B	48 – 62	140	56	28	21	3.5	105	104	—	51	M8	20	10
MK-JC 48	C	15 – 62	188	80	28	21	3.5	105	104	69	51	M8	20	10
MK-JC 55	A	20 – 60	160	65	30	22	4.0	120	98	52	60	M10	20	17
MK-JC 55	B	55 – 74	160	65	30	22	4.0	120	118	—	60	M10	20	17
MK-JC 65	A	20 – 70	185	75	35	26	4.5	135	115	61	68	M10	20	17
MK-JC 75	A	30 – 80	210	85	40	30	5.0	160	135	69	80	M10	25	17
MK-JC 90	A	40 – 97	245	100	45	34	5.5	200	160	81	100	M12	30	40
MK-JC 100	A	50 – 115	270	110	50	38	6.0	225	180	89	113	M12	30	40
MK-JC 110	A	60 – 125	295	120	55	42	6.5	255	200	96	127	M16	35	80
MK-JC 125	A	60 – 145	340	140	60	46	7.0	290	230	112	147	M16	40	80
MK-JC 140	A	60 – 160	375	155	65	50	7.5	320	255	124	165	M20	45	140
MK-JC 160	A	80 – 185	425	175	75	57	9.0	370	290	140	192	M20	50	140
MK-JC 180	A	85 – 200	475	195	85	64	10.5	425	325	156	220	M20	50	140

CARBON STEEL HUB SERIES (MK-JC 14 – MK-JC 90) • 钢件轴套基本尺寸参数表 (C45E / EN 1.1191 — Standard A/B & Lengthened C)

Bore ISO 286-2 H7 | Keyway DIN 6885-1 JS9 | Set Screw ISO 4029

Model 型号	Part 标准 / 加长	Bore d 孔径范围 [mm]	L (A,B / C) 总长 [mm]	L1, L2 (A,B / C) 轴套长 [mm]	E 间距	b 爪宽	t 间隙	D 外径	D1, D2 毂径 (A / B,C)	N 凸台 (A / C)	d3 内腔径	Screw M 紧定螺钉	Pos. S 孔位	T_A [Nm] 锁紧扭矩
MK-JC 14	B / C	0 – 16	35 / 50	11 / 18.5	13	10	1.5	30	30	—	10	M4	5	1.5
MK-JC 19	A / C	0 – 25	66 / 90	25 / 37	16	12	2.0	40	40	—	18	M5	10	2.0
MK-JC 24	B / C	0 – 35	78 / 118	30 / 50	18	14	2.0	55	55	—	27	M5	10	2.0
MK-JC 28	B / C	0 – 40	90 / 140	35 / 60	20	15	2.5	65	65	—	30	M8	15	10
MK-JC 38	A / C	0 – 48	114 / 164	45 / 70	24	18	3.0	80	70 / 80	27 / —	38	M8	15	10
MK-JC 42	A / C	0 – 55	126 / 176	50 / 75	26	20	3.0	95	85 / 95	28 / —	46	M8	20	10
MK-JC 48	A / C	0 – 62	140 / 188	56 / 80	28	21	3.5	105	95 / 105	32 / —	51	M8	20	10
MK-JC 55	A / C	0 – 74	160 / 210	65 / 90	30	22	4.0	120	110 / 120	37 / —	60	M10	20	17
MK-JC 65	A / C	0 – 80	185 / 235	75 / 100	35	26	4.5	135	115 / 135	47 / —	68	M10	20	17
MK-JC 75	A / C	0 – 95	210 / 260	85 / 110	40	30	5.0	160	135 / 160	53 / —	80	M10	25	17
MK-JC 90	A / C	0 – 110	245 / 295	100 / 125	45	34	5.5	200	160 / 200	62 / —	100	M12	30	40

DEFAULT CAST IRON GRADE RULE • 铸件材料默认交付标准

Unless otherwise specified in the purchase order, cast iron hubs are supplied in **EN-GJL-250 (GG25 / HT250)** for sizes **MK-JC 38 to 90**, and **EN-GJS-400-15 (GGG40 / QT400)** nodular cast iron for sizes **MK-JC 100 to 180**.

BORE, KEYWAY & SET SCREW NOTE • 孔径公差与紧定螺钉说明

Finished bore tolerance: **ISO 286-2 H7**; keyway acc. to **DIN 6885-1 JS9**; set screw acc. to **ISO 4029 (DIN 916)**. For sizes **MK-JC 125 and above**, radial set screws are machined upon customer request.

MISHKIN

Ordering Code & Structural CAD Configurations • 选型编码示例与标准型/加大型/加长型结构尺寸图

Standard Type (A+A), Standard Oversized Type (A+B), and BZ Lengthened Hub Type (A+C) CAD Drawings

EUROPEAN STANDARD • 欧洲标准体系
DIN 740-2 • ISO 286-2 H7 • DIN 6885-1 JS9

ORDERING CODE EXAMPLE • 选型编码示例: MK-JC28 - C - AA - T - P - Ø24 - Ø25 - 98 — Complete Part Number Breakdown • 订货编码结构说明

MK-JC28	C	AA	T	P	Ø24	Ø25	98	—
Coupling Model 产品规格型号	**Cast Iron Hub** 铸件轴套 (C)	**Hub Combination** 结构形式 (A+A)	Quenched & Tempered 热处理调质 (T)	Phosphate Coating 表面磷化处理 (P)	**Left Bore d_1** 左轴孔径 Ø24	**Right Bore d_2** 右轴孔径 Ø25	**98 Shore A Spider** 弹性体硬度 98ShA	Special Note 特殊要求备注

1. STANDARD TYPE (A + A) • 标准型结构尺寸图 (Type A + Type A)

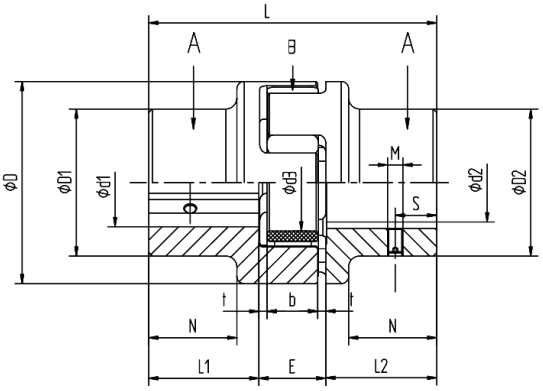

1: Left Hub Type A (D_1 < D) **2:** Right Hub Type A (D_2 < D)
3: Polyurethane Spider (92/98 ShA, 64 ShD)

2. STANDARD OVERSIZED TYPE (A + B) • 标准加大型结构尺寸图 (Type A + Type B)

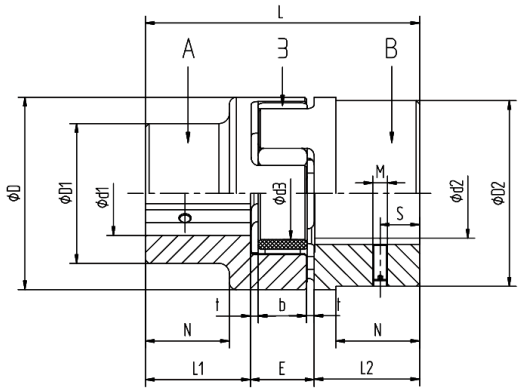

1: Left Hub Type A (Stepped Boss D_1)
2: Right Hub Type B (Full OD Boss D_2 = D for Large Bore) **3:** Polyurethane Spider

3. BZ LENGTHENED HUB TYPE (A + C) • BZ 加长型结构尺寸图 (Type A + Type C)

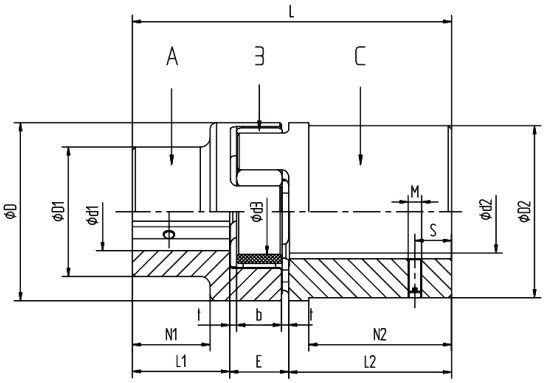

Type C (BZ): Extended Hub Length L_2 for Long Motor / Pump Shafts • 加长轴套适配长轴伸安装

MODULAR HUB COMBINATION GUIDE • 模块化轴套选型与组合指南

TYPE A HUB (STEPPED BOSS • 标准阶梯轴套)
Reduced outer boss diameter D_1 minimizes rotational moment of inertia J for standard motor shaft diameters.
采用缩径凸台 D_1 设计，有效降低转动惯量与自身重量，适用于中小型标准电机轴径。

TYPE B HUB (FULL-OD BOSS • 大孔径满外径轴套)
Full hub diameter $D_2 \approx D$ accommodates maximum shaft bore diameters while maintaining DIN 6885-1 keyway wall thickness.
轴套外径与联轴器外径平齐 ($D_2 \approx D$)，提供充足键槽壁厚，适用于大轴径安装。

TYPE C / BZ HUB (LENGTHENED BOSS • 加长型轴套)
Extended hub length L_1 / L_2 bridges larger axial distances between driving and driven shaft ends without requiring a spacer.
加长轴套长度 L_1/L_2，支持更长轴伸包覆与较大跨距安装，可任意组合为 AA、AB、BB、AC、BC、CC。

MISHKIN

Two-Section Spacer Curved-Jaw Coupling • 双节式梅花形弹性体爪式联轴器 (MK-JC-SJ)

Double-Cardan 3-Piece Design with Dual Polyurethane Spiders for Large Radial Misalignment Compensation

EUROPEAN STANDARD • 欧洲标准体系
DIN 740-2 • ISO 286-2 H7 • DIN 6885-1 JS9

PRODUCT & CAD STRUCTURE • 双节式联轴器实物与结构尺寸图 (SJ Type)



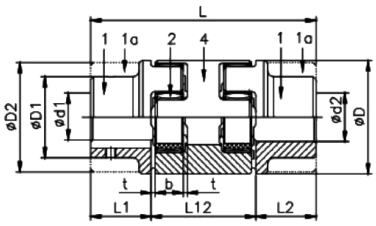

1 / 1a: Outer Hubs (Type A or B) • 两端轴套 **2:** Center Double-Jaw Spacer • 中间双爪隔套
4: Dual Spiders (2 × PUR) • 双梅花弹性体

TECHNICAL CHARACTERISTICS • 产品技术特点

1. DOUBLE-CARDAN LARGE MISALIGNMENT CAPACITY • 超大径向与轴向纠偏能力

Three-piece double-cardan architecture with two elastomeric spiders in series compensates for extreme radial, angular (1° per spider), and axial shaft misalignments.

三部件双节式卡丹结构（两件轴套 + 中间双爪节 + 双弹性体），可补偿极大的径向、角向与轴向安装偏差。

2. ULTRA-LOW RESTORING FORCE & BEARING PROTECTION • 极低回复力与轴承保护

Very low radial restoring force under misalignment significantly extends the service life of adjacent bearings, mechanical seals, and gearboxes.

偏差引起的径向恢复力极小，阻尼减振降噪显著，大幅延长相邻部件（轴承、机械密封等）的使用寿命。

3. ELECTRICAL INSULATION & ISO/DIN TOLERANCES • 电气绝缘与欧标公差

Finished bore tolerance ISO 286-2 H7; keyway DIN 6885-1 JS9; set screw ISO 4029. Free hub combinations: A+A, A+B, or B+B.

双重聚氨酯弹性体带来优异电气绝缘性；孔径公差 ISO H7，键槽 DIN 6885-1 JS9；两端轴套可自由组合为 A+A、A+B 或 B+B。

TECHNICAL & DIMENSIONAL PARAMETERS — MK-JC-SJ SERIES • 双节式梅花联轴器技术与外形尺寸表

Max. Permissible Deviations at n = 1,500 min⁻¹ (rpm)

Model 型号	Nominal Torque T_{KN} [Nm] 弹性体额定扭矩 [Nm]		Max. Permissible Deviation (n=1,500 min⁻¹) 最大许用安装偏差			Dimensions • 外形尺寸 [mm]						
	92 ShA 黄色标准	98 ShA 红色高扭	Radial ΔK_r 径向 [mm]	Angular ΔK_w 角向 [°]	Axial ΔK_a 轴向 [mm]	L 总长	L1, L2 轴套长	L12 中节长	b 爪宽	t 间隙	D 外径	d, D1, D2 孔径与毂径
MK-JC 19-SJ	10	17	0.45	1°	+1.2 / -1.0	92	25	42	12	2.0	40	See Standard MK-JC 参照标准型
MK-JC 24-SJ	35	60	0.59	1°	+1.4 / -1.0	112	30	52	14	2.0	55	See Standard MK-JC 参照标准型
MK-JC 28-SJ	95	160	0.66	1°	+1.5 / -1.4	128	35	58	15	2.5	65	See Standard MK-JC 参照标准型
MK-JC 38-SJ	190	325	0.77	1°	+1.8 / -1.4	158	45	68	18	3.0	80	See Standard MK-JC 参照标准型
MK-JC 42-SJ	265	450	0.84	1°	+2.0 / -2.0	174	50	74	20	3.0	95	See Standard MK-JC 参照标准型
MK-JC 48-SJ	310	525	0.91	1°	+2.1 / -2.0	192	56	80	21	3.5	105	See Standard MK-JC 参照标准型
MK-JC 55-SJ	410	685	1.01	1°	+2.2 / -2.0	218	65	88	22	4.0	120	See Standard MK-JC 参照标准型
MK-JC 65-SJ	625	940	1.17	1°	+2.6 / -2.0	252	75	102	26	4.5	135	See Standard MK-JC 参照标准型
MK-JC 75-SJ	1280	1920	1.33	1°	+3.0 / -3.0	286	85	116	30	5.0	160	See Standard MK-JC 参照标准型
MK-JC 90-SJ	2400	3600	1.48	1°	+3.4 / -3.0	330	100	130	34	5.5	200	See Standard MK-JC 参照标准型

ORDERING CODE EXAMPLE • 选型编码示例: MK-JC28 - S - SJ - T - B - Ø24 - Ø25 - 98

Bore ISO H7 • Keyway DIN 6885-1 JS9 • Set Screw ISO 4029

MK-JC28	S	SJ	T	B	Ø24	Ø25	98	—
Coupling Size 产品规格	Steel Hubs (C45E) 钢件轴套 (S)	2-Section Spacer 双节式结构 (SJ)	Quenched & Tempered 热处理调质 (T)	Black Oxide 表面发黑 (B)	Left Bore d_1 左孔径 Ø24	Right Bore d_2 右孔径 Ø25	98 ShA Spider 弹性体硬度 98ShA	Special Note 特殊备注

Flange-Mounted Curved-Jaw Coupling (MK-JC-FL) • 法兰型重型梅花形弹性体爪式联轴器

Radial Drop-Out Spider Replacement Without Shifting Driving or Driven Machinery • C45E & EN-GJS-400-15

EUROPEAN STANDARD • 欧洲标准体系
DIN 740-2 • ISO 286-2 H7 • DIN 6885-1 JS9

PRODUCT VIEW • 法兰型联轴器实物图



TECHNICAL FEATURES • 法兰型重载联轴器技术特点

- **Heavy-Duty Radial Maintenance:** Configurations **FA / FB (FLA / FLB)** and **FC / FD / FE / FF** allow radial disassembly of the flange ring to replace the polyurethane spider without moving either the prime mover or driven machine.
- **Materials & Standards:** Part 4N in **C45E Steel (EN 1.1191)**, Part 3Na in **C45E Steel**, Claw Flange Ring in **EN-GJS-400-15 (GGG40) Ductile Iron**. Bore **ISO H7**, Keyway **DIN 6885-1 JS9**.

适用于重型机械领域；拆下法兰即可径向更换弹性体，无需移动主、从动端设备；材质采用 45号钢 (C45E) 与球墨铸铁 GGG40 (EN-GJS-400-15)。

DIMENSIONAL TABLE I — TYPES FA / FB (FLA / FLB) • FA / FB 型法兰式梅花联轴器基本尺寸表 [mm]

Connecting Bolts: ISO 4762 (DIN 912) Class 10.9 / 12.9

Model 型号	Bore d_1 4N成品孔	D	DF	D4	d3	L1, L2	E	E1	t	b	L3, L4	LFA	LFB	Bolt M × L 连接螺栓	Qty 数量	T_A [Nm] 锁紧扭矩
MK-JC 24-FL	0 – 24	55	36	45	27	30	18	33	2.0	14	30.5	94	86	M5 × 16	8	10
MK-JC 28-FL	0 – 28	65	42	54	30	35	20	39	2.5	15	35.5	110	100	M6 × 20	8	17
MK-JC 38-FL	0 – 38	80	52	66	38	45	24	43	3.0	18	45.5	134	124	M8 × 22	8	41
MK-JC 42-FL	0 – 42	95	62	80	46	50	26	48	3.0	20	51.0	150	138	M8 × 25	12	41
MK-JC 48-FL	0 – 48	105	70	90	51	56	28	50	3.5	21	57.0	164	152	M8 × 25	12	41
MK-JC 55-FL	0 – 55	120	80	102	60	65	30	60	4.0	22	66.0	192	176	M10 × 30	8	83
MK-JC 65-FL	0 – 65	135	94	116	68	75	35	65	4.5	26	76.0	217	201	M10 × 30	12	83
MK-JC 75-FL	0 – 75	160	108	136	80	85	40	75	5.0	30	86.5	248	229	M12 × 40	15	120
MK-JC 90-FL	0 – 100	200	142	172	100	100	45	82	5.5	34	101.5	285	265	M16 × 40	15	295
MK-JC 100-FL	0 – 110	225	158	195	113	110	50	97	6.0	38	111.5	320	295	M16 × 50	15	295
MK-JC 110-FL	0 – 125	255	178	218	127	120	55	103	6.5	42	122.0	347	321	M20 × 50	15	580
MK-JC 125-FL	0 – 145	290	206	252	147	140	60	116	7.0	46	142.0	400	370	M20 × 60	15	580
MK-JC 140-FL	0 – 165	320	235	282	165	155	65	128	7.5	50	157.5	443	409	M20 × 60	15	580
MK-JC 160-FL	0 – 190	370	270	325	190	175	75	146	9.0	57	177.5	501	463	M24 × 70	15	1000
MK-JC 180-FL	0 – 220	420	315	375	220	195	85	159	10.5	64	198.0	555	515	M24 × 80	18	1000

DIMENSIONAL TABLE II — TYPES FC / FD / FE / FF • FC / FD / FE / FF 型法兰式梅花联轴器基本尺寸表 [mm]

All dimensions in mm

Model 型号	Bore d_1 4N成品孔	D	d3	L1	E	t	b	L5	L7	DA	D3	D4	LFC	LFF	DN3	DN4	Bolt M 螺栓	Qty 数量	LFE	LFD
MK-JC 24-FL	0 – 35	55	27	30	18	2.0	14	1.5	8	80	55	65	56	34	36	45	M5	8	56	34
MK-JC 28-FL	0 – 40	65	30	35	20	2.5	15	1.5	10	100	65	80	65	40	44	54	M6	8	65	40
MK-JC 38-FL	0 – 48	80	38	45	24	3.0	18	1.5	10	115	80	95	79	44	54	66	M8	8	79	44
MK-JC 42-FL	0 – 55	95	46	50	26	3.0	20	2.0	12	140	95	115	88	50	65	80	M8	12	88	50
MK-JC 48-FL	0 – 62	105	51	56	28	3.5	21	2.0	12	150	105	125	96	52	75	90	M8	12	96	52
MK-JC 55-FL	0 – 74	120	60	65	30	4.0	22	2.0	16	175	120	145	111	62	84	102	M10	8	111	62
MK-JC 65-FL	0 – 80	135	68	75	35	4.5	26	2.0	16	190	135	160	126	67	96	116	M10	12	126	67
MK-JC 75-FL	0 – 95	160	80	85	40	5.0	30	2.5	19	215	160	185	144	78	112	136	M12	15	144	78
MK-JC 90-FL	0 – 110	200	100	100	45	5.5	34	3.0	20	260	200	225	165	85	145	172	M16	15	165	85
MK-JC 100-FL	0 – 115	225	113	110	50	6.0	38	4.0	25	285	225	250	185	100	165	195	M16	15	185	100
MK-JC 110-FL	0 – 125	255	127	120	55	6.5	42	4.0	26	330	255	290	201	107	180	218	M20	15	201	107
MK-JC 125-FL	0 – 145	290	147	140	60	7.0	46	5.0	30	370	290	325	230	120	215	252	M20	15	230	120
MK-JC 140-FL	0 – 160	320	165	155	65	7.5	50	5.0	34	410	320	360	254	133	245	282	M20	15	254	133

MISHKIN

Flange Jaw Coupling CAD Configurations (FA – FF) • 法兰型梅花联轴器选型编码与六种安装结构图

Detailed Structural Cross-Sections for Types FA, FB, FC, FD, FE, and FF Heavy-Duty Flange Mountings

EUROPEAN STANDARD • 欧洲标准体系
DIN 740-2 • ISO 286-2 H7 • DIN 6885-1 JS9

ORDERING CODE EXAMPLE • 选型编码示例: MK-JC28 - C - FA - T - B - Ø24 - Ø25 - 98 — Specify Flange Style: FA, FB, FC, FD, FE, or FF

MK-JC28	C	FA	T	B	Ø24	Ø25	98	—
Coupling Size 产品规格	**Cast Iron / Ductile** 铸件 (C)	**Flange Type FA** 法兰结构形式 (FA)	Quenched & Tempered 热处理调质 (T)	Black Oxide 表面发黑 (B)	**Left Bore d_1** 左孔径 Ø24	**Right Bore d_2** 右孔径 Ø25	**98 ShA Spider** 弹性体硬度 98ShA	Special Note 特殊备注

TYPE FA • 双端内法兰径向快拆型 (FA Type)

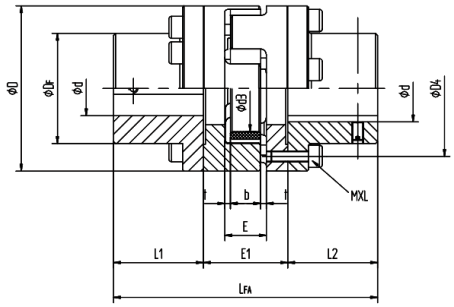

Overall Length: L_{FA} • Both shafts retained by inner hubs 4N + clamping flanges 3Na

TYPE FB • 双端外翻法兰加长型 (FB Type)

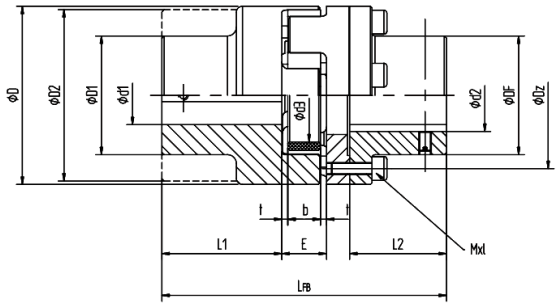

Overall Length: L_{FB} • Reversed outer flange orientation for extended shaft gap E_1

TYPE FC • 单端法兰 + 标准轴套型 (FC Type)

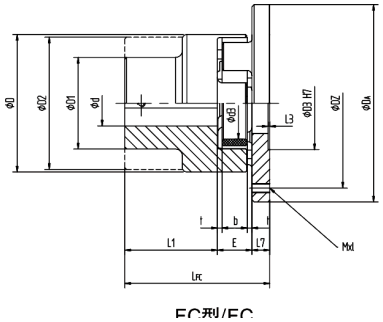

FC型/FC

Overall Length: L_{FC} • Left standard hub + Right bolting flange (Pitch Circle D_3 / Outer D_A)

TYPE FD • 单端法兰盘直联飞轮/法兰轴型 (FD Type)

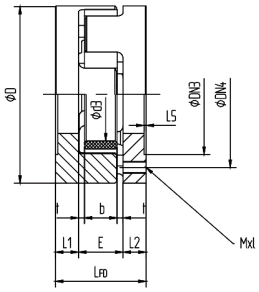

FD型/FD

Overall Length: L_{FD} • Direct flange-to-machine mounting without right shaft hub

TYPE FE • 内法兰快拆 + 外接法兰盘型 (FE Type)

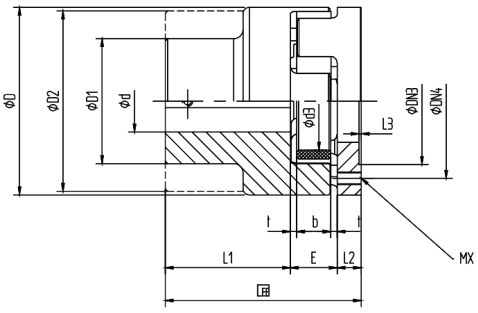

Overall Length: L_{FE} • Left radial drop-out hub 4N/3Na + Right external mounting flange D_A

TYPE FF • 双端外接法兰盘无轴套型 (FF Type)

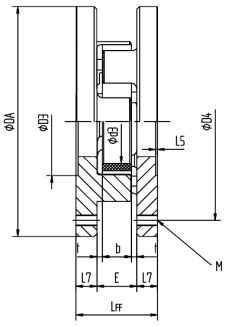

Overall Length: L_{FF} • Dual flange plates for direct bolting between two flanged shafts

MISHKIN

Jaw Coupling with Brake Drum (ZDG) / Brake Disc (ZDP) • 制动鼓 / 制动盘式梅花形爪式联轴器 (MK-JC-ZD)

Integrated Coupling for Industrial Shoe Brakes (DIN 15435) & Caliper Disc Brakes • Bore ISO H7 & Keyway DIN 6885-1 JS9

EUROPEAN STANDARD • 欧洲标准体系
DIN 740-2 • ISO 286-2 H7 • DIN 6885-1 JS9

PRODUCT & CAD DRAWINGS • 制动鼓 (Type A ZDG) 与制动盘 (Type B ZDP) 实物及尺寸图

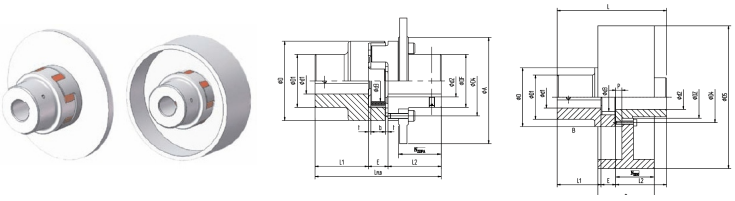

Type A (ZDG): With Brake Drum (for Twin-Shoe Drum Brake • 瓦块式外抱制动器)
Type B (ZDP): With Brake Disc (for Caliper Disc Brake • 钳盘式制动器)

TECHNICAL CHARACTERISTICS • 产品技术特点与安全准则

1. DRUM (ZDG) & CALIPER DISC (ZDP) BRAKING • 制动鼓与制动盘双系列
ZDG integrates a precision-turned brake drum for external double-shoe brakes; ZDP integrates a flat brake disc for hydraulic/pneumatic caliper brakes.
带制动鼓 (ZDG) 适用于两块外部制动瓦抱紧摩擦制动场合；带制动盘 (ZDP) 适用于钳盘式制动器。

2. MANDATORY MOUNTING ON LARGEST-INERTIA SHAFT • 必须安装在最大惯量轴端
The hub carrying the brake drum or brake disc must be mounted on the shaft end with the largest moment of inertia (typically the gearbox input shaft).
制动鼓或制动盘一侧轴套必须安装在系统转动惯量最大的轴端，防止制动冲击直接穿过弹性体。

3. MAX BRAKING TORQUE & BORE TOLERANCES • 最大制动扭矩与欧标公差
Maximum braking torque must never exceed the coupling's peak torque T_{Kmax}. Finished bore ISO 286-2 H7; keyway DIN 6885-1 JS9.
最大制动扭矩不得超过联轴器的最大许用扭矩 T_{Kmax}；成品孔公差 ISO H7，平键槽 DIN 6885-1 JS9。

DIMENSIONAL & TORQUE PARAMETERS — MK-JC-ZD SERIES • 制动鼓/制动盘式联轴器尺寸与扭矩参数表

Note: Brake Drum (ZDG) / Brake Disc (ZDP) Dimensions Ordered Separately by Drum Ø × Width

Model 型号 (ZDG / ZDPA)	Nominal Spider Torque T_{KN} [Nm] 弹性体额定扭矩 [Nm]			Max Finished Bore B [mm] 最大成品孔径 B		Coupling Hub Dimensions • 联轴器主体尺寸 [mm]										
	92 ShA	98 ShA	64 ShD	Cast Iron 铸件	Steel 钢件	D	DZ	D4	d3	L	L1, L2	E	P	N_{zdg}	N_{zdpa}	Bolts Qty 螺栓数量
MK-JC 38-ZD	190	325	405	—	34	80	50	66	38	114	45	24	7.5	37.5	37.5	8
MK-JC 42-ZD	265	450	560	—	42	95	60	80	46	126	50	26	9.5	40.5	40.5	12
MK-JC 48-ZD	310	525	655	—	48	105	68	90	51	140	56	28	10.5	45.5	45.5	12
MK-JC 55-ZD	410	685	825	—	55	120	78	102	60	160	65	30	12.5	52.5	52.5	8
MK-JC 65-ZD	625	940	1175	—	65	135	92	116	68	185	75	35	13.5	61.5	61.5	12
MK-JC 75-ZD	1280	1920	2400	—	75	160	106	136	80	210	85	40	15.5	69.5	69.5	15
MK-JC 90-ZD	2400	3600	4500	—	100	200	140	172	100	245	100	45	18.5	89.5	89.5	15
MK-JC 100-ZD	3300	4950	6185	100	—	225	156	195	113	270	110	50	20.5	98.5	98.5	15
MK-JC 110-ZD	4800	7200	9000	110	—	255	176	218	127	295	120	55	23.5	96.5	96.5	15
MK-JC 125-ZD	6650	10000	12500	130	—	290	204	252	147	340	140	60	27.5	112.5	112.5	15

ORDERING CODE EXAMPLE • 选型编码示例: MK-JC42 - C - ZD - T - B - Ø24 - Ø25 - 98

Corrected from Legacy Typo "GER42" to Standard MISHKIN Code "MK-JC42"

MK-JC42	C	ZD (ZDG / ZDP)	T	B	Ø24	Ø25	98	—
Coupling Size 产品规格	Cast Iron / Steel 铸件 (C) / 钢件 (S)	Brake Drum / Disc 制动式结构 (ZD)	Quenched & Tempered 热处理调质 (T)	Black Oxide 表面发黑 (B)	Left Bore d_1 左孔径 Ø24	Right Bore d_2 右孔径 Ø25	98 ShA Spider 弹性体硬度 98ShA	Brake Drum/Disc Size 制动轮/盘规格备注

MISHKIN

Single-Slit Clamping Curved-Jaw Coupling • 单开槽夹紧型梅花形弹性体爪式联轴器 (MK-JC-DK)

Tangential Clamping Screw Hub (ISO 4762 Class 12.9) with Optional DIN 6885-1 JS9 Keyway • C45E Steel

EUROPEAN STANDARD • 欧洲标准体系
DIN 740-2 • ISO 286-2 H7 • DIN 6885-1 JS9

CAD DRAWING I • 规格 MK-JC 19-DK ~ 28-DK 结构图 (Single Clamping Screw per Hub)

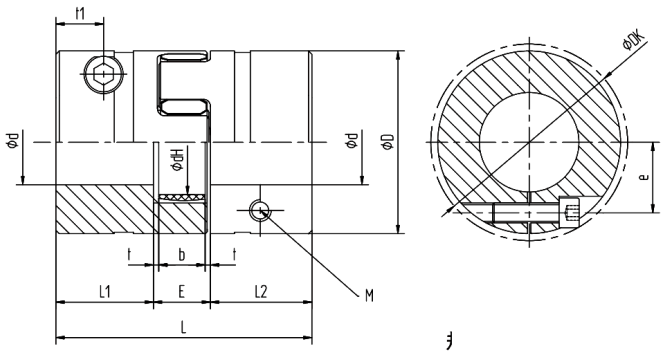

Sizes 19 – 28: 1 × Tangential Clamping Screw **M** at distance t_1 • Screw Clearance Circle $ØD_k$

CAD DRAWING II • 规格 MK-JC 38-DK ~ 90-DK 结构图 (Heavy-Duty Clamping Hub)

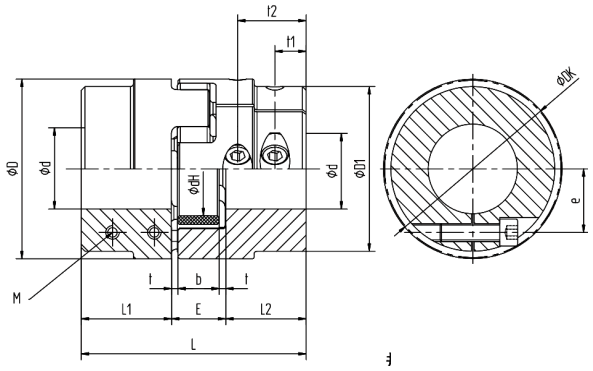

Sizes 38 – 90: Heavy-Duty Clamping Hub (Dual Screws at t_1, t_2 on sizes 55 – 90) • Screw Clearance $ØD_k$

DIMENSIONAL & CLAMPING SCREW TABLE — MK-JC-DK SERIES • 单开槽夹紧式梅花联轴器尺寸参数表 [mm]

Fasteners: ISO 4762 (DIN 912) Class 12.9 | Bore Tolerance: ISO 286-2 H7

Model 型号	Max Bore d_{max} 最大成品孔 [mm]	Dimensions • 外形与安装尺寸 [mm]											Clamping Screw 锁紧螺钉 (ISO 4762)	
		L	L1, L2	E	b	t	D	d_H	D_k	t_1	t_2	e	Size M 螺钉规格	Torque T_A 锁紧力矩 [Nm]
MK-JC 19-DK	20	66	25	16	12	2.0	40	18	46.0	12	—	14.5	M6	10.5
MK-JC 24-DK	28	78	30	18	14	2.0	55	27	57.5	12	—	20.0	M6	10.5
MK-JC 28-DK	38	90	35	20	15	2.5	65	30	73.0	14	—	25.0	M8	25.0
MK-JC 38-DK	42	114	45	24	18	3.0	80	38	83.5	19	—	26.5	M8	25.0
MK-JC 42-DK	50	126	50	26	20	3.0	95	46	93.5	18	—	32.0	M10	69.0
MK-JC 48-DK	55	140	56	28	21	3.5	105	51	105.0	21	—	36.0	M12	120
MK-JC 55-DK	68	160	65	30	22	4.0	120	60	119.5	26	51	42.5	M12	120
MK-JC 65-DK	70	185	75	35	26	4.5	135	68	124.0	33	61	50.0	M12	120
MK-JC 75-DK	80	210	85	40	30	5.0	160	80	147.5	36	68	57.0	M16	295
MK-JC 90-DK	90	245	100	45	34	5.5	200	104	192.0	40	80	72.0	M20	580

ORDERING CODE EXAMPLE • 选型编码示例: MK-JC42 - S - DK - T - B - Ø24 - Ø25 - 98 - Flat Key - No

Available With Parallel Keyway (DIN 6885-1 JS9) or Keyless Friction Clamping

MK-JC42	S	DK	T	B	Ø24	Ø25	98	Flat Key (DIN 6885-1)	No	—
Coupling Size 产品规格	Steel Hub (C45E) 钢件 (S)	Single-Slit Hub 单开槽结构 (DK)	Tempered 调质 (T)	Black Oxide 发黑 (B)	Left Bore 左孔径 Ø24	Right Bore 右孔径 Ø25	98 ShA Spider 弹性体 98ShA	Keyway Option 平键槽 (Flat Key / None)	Dynamic Balance 是否动平衡 (Yes/No)	Note 备注

MISHKIN

Zero-Backlash Preloaded Servo Jaw Coupling • 梅花形无齿隙预压型精密伺服联轴器 (MK-JCS)

Three-Piece Axial Plug-In Assembly with Radial Preloaded Polyurethane Spider for Dynamic Servo Drives

EUROPEAN SERVO STANDARD • 欧洲伺服标准
DIN 740-2 • ISO 286-2 H7 • DIN 6885-1 JS9

EXPLODED & ASSEMBLED VIEW • 三件套轴向盲装结构与实物图

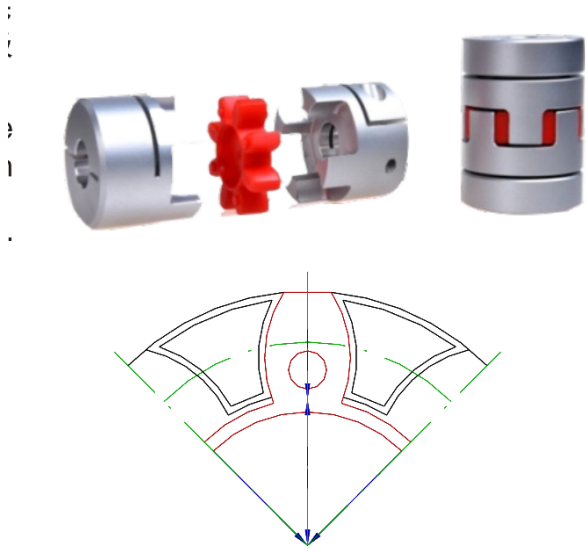

Top: 3-Piece Plug-In Assembly (Left Hub + Preloaded Spider + Right Hub)
Bottom: Concave Jaw Profile + Internal Radial Support Web • 高速防离心凹弧爪齿与内支撑环

ZERO-BACKLASH ENGINEERING PRINCIPLES • 无齿隙精密传动核心设计

1. Three-Piece Preloaded Zero-Backlash Design: The **MK-JCS** servo jaw coupling consists of two precision CNC-machined metallic hubs and a radially preloaded polyurethane spider. Axial plug-in assembly under controlled elastic preload guarantees **100% zero-backlash torque transmission** while combining high torsional stiffness with superior vibration damping—dramatically improving the dynamic response of closed-loop servo systems.

1. 三部件预压无齿隙设计：MK-JCS（原 GS 系列）无齿隙伺服联轴器由两个金属轴套与一个预压梅花弹性体组成，支持便捷的轴向插装。在弹性体预应力作用下实现完全无齿隙的正反转传动，将高扭转刚度与优异的减振阻尼特性完美结合，显著提升伺服传动系统的动态响应品质。

2. Straight-Tooth Preloaded Spider & High-Speed Concave Jaw Support: The straight-tooth elastomeric spider is installed under radial compression preload so the tooth flanks remain under continuous positive compressive stress. The concave hub jaw profile and internal radial support ring prevent centrifugal bulging or internal deformation during high-speed rotation and high-acceleration servo indexing, ensuring long-term smooth operation.

2. 直齿预应力弹性体与高速防离心内支撑结构：直齿型弹性体在预应力下安装，表面始终承受正压力，使联轴器具备极高扭转刚度。同时凹弧形爪齿与内置径向支撑腹板可有效防止高速旋转或高加减速时弹性体因离心力产生内部变形，确保长期平稳运行。

3. Chamfered Jaws for Blind Axial Assembly & Reduced Contact Stress: Both the metallic hub jaws and the polyurethane spider teeth feature precision lead-in chamfers for effortless "blind axial assembly". Raised micro-bosses on the spider flanks minimize axial insertion force and prevent edge stress concentration—as long as axial mounting dimension **E** is maintained, full misalignment compensation capacity is guaranteed.

3. 爪齿倒角“盲装”设计与减摩小凸柱：轴套爪齿与弹性体爪齿均设计有引导倒角，装配时便于“盲装”轴向对插。弹性体齿侧的小凸柱有效减小接触面积与插装阻力；安装时只需确保轴套端面间距尺寸 **E**，即可保证联轴器的完整纠偏能力。

MK-JCS SERVO COUPLING HUB CONFIGURATIONS • 无齿隙精密伺服联轴器五大轴套结构选型表

Sizes MK-JCS 5 to MK-JCS 90 | Bore Ø3 mm to Ø105 mm

MISHKIN Series 系列代号	Hub Clamping Principle 轴套锁紧方式	Hub Material 轴套标准材质	Size Range 规格范围	Max Speed v_{max} 最大允许线速度	Primary Servo Application 典型精密传动应用	Page 页码
MK-JCS	Set-Screw Hub (Type A / B, with or without Keyway)	Al-Alloy (5–38) / C45E Steel (42–90)	9 – 90	30 m/s	Encoders, stepper drives, small instrumentation	P. 26
MK-JCS-KC	Double-Slit Radial Clamping Hub (Keyless or Keyed)	Al-Alloy (19–38) / C45E Steel (42–90)	19 – 90	40 m/s	Servo ball screws, lifting platforms, CNC axes	P. 27
MK-JCS-DK	Single-Slit Radial Clamping Hub (Keyless or Keyed)	High-Strength Al-Alloy (EN AW-7075)	9 – 28	40 m/s	Compact servo actuators, linear stages, robotics	P. 28
MK-JCS-ZT-AL	Integrated Conical Taper Clamping Ring (Aluminum)	High-Strength Al-Alloy (EN AW-7075)	14 – 48	40 m/s	High-speed low-inertia servo & handling axes	P. 29
MK-JCS-ZT-S	Integrated Conical Taper Clamping Ring (Steel)	C45E / 42CrMo4 High-Strength Steel	19 – 90	**50 m/s**	CNC machine tool main spindles & roll feeds	P. 30

MISHKIN

Electrical Insulation Clearance & Four Spider Grades • 电气绝缘间隙 S 与四种硬度预压梅花弹性体选型

80 Shore A (Blue), 92 Shore A (Yellow), 98 Shore A (Red), and 64 Shore D (Green) Preloaded Polyurethane Spiders

ELECTRICAL INSULATION GAP "S" • 轴向电气绝缘间隙 S 图解

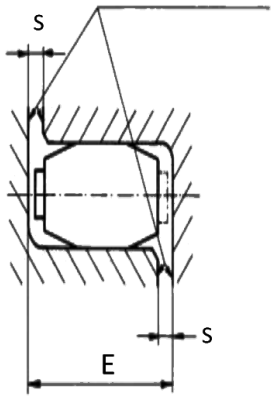

S: Positive Axial Insulation Gap between Hub Tips and Spider Root
E: Overall Axial Distance between Mating Hub Faces

ELECTRICAL INSULATION & PRELOAD SELECTION • 电气绝缘与弹性体预压特性

1. GUARANTEED ELECTRICAL INSULATION VIA GAP "S" • 间隙“S”确保可靠电气绝缘
The axial clearance "S" built into the spider root prevents metallic contact between the left and right hubs, ensuring complete electrical insulation and eliminating parasitic shaft currents. This feature is critical for meeting high-resolution rotary encoder accuracy and electromagnetic compatibility (EMC) requirements.
右图所示间隙“S”确保了联轴器的完全电气绝缘性，同时使弹性体受力更均匀、使用寿命更长。这一特性对于满足编码器的高精度要求以及电磁兼容性（EMC）至关重要。

2. FOUR COLOR-CODED SHORE HARDNESS GRADES • 四种颜色区分不同刚度与阻尼
MK-JCS offers four color-coded polyurethane spider hardnesses ranging from soft (80 ShA Blue) to ultra-rigid (64 ShD Green), allowing engineers to tailor torsional stiffness, natural resonance frequency, and vibration damping to each drive axis.
MK-JCS 配备四种以颜色区分的不同硬度聚氨酯（PU）弹性体，材质由软到硬，可根据系统对扭转刚性、固有频率及减振特性的需求灵活匹配。

3. RADIAL PRELOAD & AXIAL INSERTION FORCE • 预压力大小与装配插入力
The radial preload magnitude and axial plug-in insertion force during assembly depend on coupling size, spider hardness grade, and shaft bore tolerance.
受预压力大小及装配时的轴向插入力大小取决于联轴器规格尺寸、弹性体硬度等级以及轴套与轴的配合公差。

MK-JCS PRELOADED POLYURETHANE SPIDER SELECTION TABLE • 无齿隙系列四种梅花弹性体技术参数与典型应用表

Material: High-Performance Cast Polyurethane (PU / TPU)

Spider Hardness 弹性体肖氏硬度	Color & Visual 颜色与外观	Material 材料牌号	Continuous Temp. 连续工作温度 [°C]	Short-Term Peak 瞬间允许温度 [°C]	Available Sizes 可供规格范围	Primary Servo & Industrial Applications 典型工程应用领域
80 Shore A 80 Sh-A (Soft)	 **Blue • 蓝色**	Polyurethane (PU) 聚氨酯 PU	**−50°C to +80°C**	−60°C to +120°C	**MK-JCS 5 – 24**	• **Electronic Measurement & Encoder Drives** • 电子测量系统、旋转编码器、光栅尺及微小扭矩精密仪器传动（极低径向回复力）
92 Shore A 92 Sh-A (Standard)	 **Yellow • 黄色**	Polyurethane (PU) 聚氨酯 PU	**−40°C to +90°C**	−50°C to +120°C	**MK-JCS 5 – 55**	• **Measurement & Control Systems / Spindle Drives** • 电子测量和控制系统传动、轻中载机床主轴传动及高减振要求伺服轴
98 Shore A 98 Sh-A (High Torque)	 **Red • 红色**	Polyurethane (PU) 聚氨酯 PU	**−30°C to +90°C**	−40°C to +120°C	**MK-JCS 5 – 90**	• **High-Dynamic Positioning / Main Spindle / High Load** • 精密定位传动（滚珠丝杠/线性模组）、主轴传动、高载荷伺服进给轴（最常用主力硬度）
64 Shore D 64 Sh-D (Ultra Rigid)	 **Green • 绿色**	Polyurethane (PU) 高模量聚氨酯 PU	**−20°C to +110°C**	−30°C to +120°C	**MK-JCS 7 – 90**	• **Heavy Machine Tool Spindles / Maximum Torsional Rigidity** • 重切削机床主轴、更高载荷及极高扭转刚性要求的同步定位系统

MISHKIN

Typical Servo, Positioning & Spindle Applications • 无齿隙精密伺服联轴器典型工程应用指南

Application-Specific Spider & Clamping Hub Selection for Encoders, CNC Axes, and Machine Tool Spindles

1. MEASUREMENT & CONTROL SYSTEMS • 测量和控制系统传动

High-torsional-rigidity **MK-JCS** couplings deliver zero-backlash angular transmission for rotary encoders, tachometers, and optical measurement instrumentation. Because the preloaded polyurethane spider transmits low-level measurement torque purely through elastic compression, there is zero lost motion upon direction reversal, guaranteeing repeatable positioning accuracy. To minimize radial bearing loads caused by shaft misalignment on delicate encoder bearings, select the softest spider grade: **80 Shore A (Blue)**. Recommended hub styles: **Standard Set-Screw**, **MK-JCS-DK**, or **MK-JCS-KC**.

高扭转刚性的 **MK-JCS** 系列联轴器在测量和控制系统中提供精准的角位移与速度反馈服务。由于弹性体经预压状态安装，在低扭力精密测量场合中，无冲击、高扭转刚度的动力传递完全由弹性体的预应力实现，确保完全无回转间隙与极高的重复定位精度。为将纠偏产生的径向附加力降至最小、保护精密编码器轴承，建议优先选用低硬度弹性体（如 **80SHA-MK-JCS 蓝色**）。推荐结构形式：**标准型、KC 型、DK 型**。





2. HIGH-DYNAMIC SERVO & POSITIONING DRIVES • 伺服进给和精密定位传动

Compared to metallic bellows or disc couplings whose ultra-high torsional stiffness can amplify servo loop resonance and hunting when mechanical vibration is present, **MK-JCS** combines zero-backlash bidirectional rotation with intrinsic polyurethane structural damping. It suppresses ball-screw resonance and high-frequency servo jitter while maintaining high positioning stiffness—making it the optimal choice for CNC linear axes, ball-screw actuators, and gantry robotics. Recommended spider: **98 Shore A (Red)**; recommended hubs: **MK-JCS-KC** or **MK-JCS-DK**.

与其他纯金属高刚性联轴器相比，当传动系统中存在较大机械振动或增益啸叫时，过高的纯金属扭转刚性往往会放大谐振并导致定位精度大幅下降。**MK-JCS** 系列兼具正反转无齿隙、高阻尼吸振和充足扭转刚度三大优点，即便在高加减速、高动态响应的伺服滚珠丝杠与线性模组系统中，也能有效抑制谐振、确保系统的动态跟随与定位精度。主要推荐结构形式：**KC 双开槽型、DK 单开槽型**（配 **98SHA 红色**弹性体）。

3. MACHINE TOOL MAIN SPINDLE DRIVES • 机床主轴高速大扭矩传动

For CNC machining center and lathe spindle drives transmitting high continuous torque and high rotational speeds, the preloaded polyurethane spider provides micro-torsional vibration damping that attenuates cutting-tooth impact loads and shifts critical torsional resonance zones outside the operating speed range. For peripheral speeds up to **v ⩽ 40–50 m/s** (measured at coupling OD), always specify the axisymmetric **MK-JCS-ZT-AL** or **MK-JCS-ZT-S** integrated conical taper clamping ring hub.

针对机床主轴传动场合，传递扭矩较大且转速极高，依靠预压弹性体优异的阻尼减振功能，不仅可减小切削峰值扭矩与冲击载荷，还能将主轴扭转共振区推移至非工作转速区之外。当联轴器外径处圆周线速度高达 **40 ~ 50 m/s** 时，强烈建议选用回转对称性极佳、无偏心开口的带一体式胀紧套的 **MK-JCS-ZT** 型联轴器（**ZT-AL** 铝质或 **ZT-S** 钢质）。



APPLICATION-BASED QUICK SELECTION GUIDE • 不同伺服与主轴工况快速选型推荐表 — MISHKIN Servo Application Engineering

Application Scenario • 应用场景	Recommended Hub Series • 推荐轴套系列	Recommended Spider • 推荐弹性体硬度	Torsional Rigidity Factor S_d • 扭转刚性系数
Rotary Encoders & Measuring Axes • 编码器与测量轴	MK-JCS (Standard) / MK-JCS-DK	80 Shore A (Blue) / 92 Shore A (Yellow)	$S_d = 10$
CNC Ball Screws & X-Y-Z Positioning • 伺服定位进给轴	MK-JCS-KC / MK-JCS-DK	98 Shore A (Red) / 64 Shore D (Green)	$S_d = 3 – 8$ (at least 4 for 64 ShD)
High-Speed Machine Tool Spindles • 高速机床主轴	MK-JCS-ZT-AL / MK-JCS-ZT-S	98 Shore A (Red) / 64 Shore D (Green)	$S_d = 2 – 5$ (at least 4 for 64 ShD)

MISHKIN

Zero-Backlash Servo Coupling Technical Parameters • 无齿隙精密伺服联轴器技术性能参数总表 (MK-JCS 5 – 90)

Speeds, Torque Ratings (TKN / TKmax), Static & Dynamic Torsional Stiffness, Radial Stiffness, Mass & Inertia

EUROPEAN SERVO STANDARD • 欧洲伺服标准
DIN 740-2 • ISO 286-2 H7 • DIN 6885-1 JS9

COMPREHENSIVE PERFORMANCE TABLE (MK-JCS 5 – MK-JCS 90) • 扭矩、扭转刚度、径向刚度、质量及转动惯量总表

Dynamic Torsional Stiffness Measured at T = 0.5 × TKN

Model 规格型号	Spider 肖氏硬度	Max Speed n_{max} [min^{-1}] by Hub Type 不同轴套形式最高转速 [r/min]			Torque [Nm] 传递扭矩		Static Torsional Stiffness 静态扭转刚度 [Nm/rad]	Dynamic Torsional Stiffness 动态扭转刚度 [Nm/rad]	Radial Stiffness 径向刚度 [N/mm]	Mass [kg] 重量 [kg]		Moment of Inertia J [kg • m^2] 转动惯量 [kg • m^2]	
		Clamping KC / DK 夹紧	Standard 标准型	Taper ZT (Al / S) 铝胀套 / 钢胀套	T_{KN} 额定	T_{Kmax} 最大				Single Hub 单个轴套	Spider 弹性体	Single Hub 单个轴套	Spider 弹性体
MK-JCS 5	80 A	38,000	47,700	—	0.3	0.6	3.15	10	82	0.001	0.2×10^{-3}	0.015×10^{-6}	0.002×10^{-6}
MK-JCS 5	92 A	38,000	47,700	—	0.5	1.0	5.16	16	154	0.001	0.2×10^{-3}	0.015×10^{-6}	0.002×10^{-6}
MK-JCS 5	98 A	38,000	47,700	—	0.9	1.7	8.30	25	296	0.001	0.2×10^{-3}	0.015×10^{-6}	0.002×10^{-6}
MK-JCS 7	80 A	27,000	34,100	—	0.7	1.4	8.60	26	114	0.003	0.5×10^{-3}	0.085×10^{-6}	0.01×10^{-6}
MK-JCS 7	92 A	27,000	34,100	—	1.2	2.4	14.3	43	219	0.003	0.5×10^{-3}	0.085×10^{-6}	0.01×10^{-6}
MK-JCS 7	98 A	27,000	34,100	—	2.0	4.0	22.9	69	421	0.003	0.5×10^{-3}	0.085×10^{-6}	0.01×10^{-6}
MK-JCS 7	64 D	27,000	34,100	—	2.4	4.8	34.3	103	630	0.003	0.5×10^{-3}	0.085×10^{-6}	0.01×10^{-6}
MK-JCS 9	80 A	19,000	23,800	—	1.8	3.6	17.2	52	125	0.01	1.7×10^{-3}	0.48×10^{-6}	0.085×10^{-6}
MK-JCS 9	92 A	19,000	23,800	—	3.0	6.0	31.5	95	262	0.01	1.7×10^{-3}	0.48×10^{-6}	0.085×10^{-6}
MK-JCS 9	98 A	19,000	23,800	—	5.0	10.0	51.6	155	518	0.01	1.7×10^{-3}	0.48×10^{-6}	0.085×10^{-6}
MK-JCS 9	64 D	19,000	23,800	—	6.0	12.0	74.6	224	739	0.01	1.7×10^{-3}	0.48×10^{-6}	0.085×10^{-6}
MK-JCS 12	80 A	15,200	19,100	—	3.0	6.0	84.3	252	274	0.02	2.3×10^{-3}	1.5×10^{-6}	0.139×10^{-6}
MK-JCS 12	92 A	15,200	19,100	—	5.0	10.0	160.4	482	470	0.02	2.3×10^{-3}	1.5×10^{-6}	0.139×10^{-6}
MK-JCS 12	98 A	15,200	19,100	—	9.0	18.0	240.7	718	846	0.02	2.3×10^{-3}	1.5×10^{-6}	0.139×10^{-6}
MK-JCS 12	64 D	15,200	19,100	—	12.0	24.0	327.9	982	1198	0.02	2.3×10^{-3}	1.5×10^{-6}	0.139×10^{-6}
MK-JCS 14	80 A	12,700	15,900	32,000 / 47,700	4.0	8.0	60.2	180	153	0.02	4.7×10^{-3}	2.8×10^{-6}	0.509×10^{-6}
MK-JCS 14	92 A	12,700	15,900	32,000 / 47,700	7.5	15.0	114.6	344	336	0.02	4.7×10^{-3}	2.8×10^{-6}	0.509×10^{-6}
MK-JCS 14	98 A	12,700	15,900	32,000 / 47,700	12.5	25.0	171.9	513	654	0.02	4.7×10^{-3}	2.8×10^{-6}	0.509×10^{-6}
MK-JCS 14	64 D	12,700	15,900	32,000 / 47,700	16.0	32.0	234.2	702	856	0.02	4.7×10^{-3}	2.8×10^{-6}	0.509×10^{-6}
MK-JCS 19	80 A	9,550	11,900	24,000 / 35,800	4.9	9.8	618	1065	582	0.09	7×10^{-3}	19.5×10^{-6}	1.35×10^{-6}
MK-JCS 19	92 A	9,550	11,900	24,000 / 35,800	10.0	20.0	1090	1815	1120	0.09	7×10^{-3}	19.5×10^{-6}	1.35×10^{-6}
MK-JCS 19	98 A	9,550	11,900	24,000 / 35,800	17.0	34.0	1512	2540	2010	0.09	7×10^{-3}	19.5×10^{-6}	1.35×10^{-6}
MK-JCS 19	64 D	9,550	11,900	24,000 / 35,800	21.0	42.0	2560	3810	2930	0.09	7×10^{-3}	19.5×10^{-6}	1.35×10^{-6}
MK-JCS 24	80 A	6,950	8,650	17,000 / 26,000	16.0	32.0	1350	2320	796	0.20	0.02	81.9×10^{-6}	6.7×10^{-6}
MK-JCS 24	92 A	6,950	8,650	17,000 / 26,000	35.0	70.0	2280	4010	1480	0.20	0.02	81.9×10^{-6}	6.7×10^{-6}
MK-JCS 24	98 A	6,950	8,650	17,000 / 26,000	60.0	120	3640	5980	2560	0.20	0.02	81.9×10^{-6}	6.7×10^{-6}
MK-JCS 24	64 D	6,950	8,650	17,000 / 26,000	75.0	150	5030	10896	3696	0.20	0.02	81.9×10^{-6}	6.7×10^{-6}
MK-JCS 28	92 A	5,850	7,350	15,000 / 22,000	95.0	190	4080	6745	1790	0.30	0.03	184.2×10^{-6}	14.85×10^{-6}
MK-JCS 28	98 A	5,850	7,350	15,000 / 22,000	160	320	6410	9920	3200	0.30	0.03	184.2×10^{-6}	14.85×10^{-6}
MK-JCS 28	64 D	5,850	7,350	15,000 / 22,000	200	400	10260	20177	4348	0.30	0.03	184.2×10^{-6}	14.85×10^{-6}
MK-JCS 38	92 A	4,750	5,950	12,000 / 17,900	190	380	6525	11050	2350	0.60	0.05	542.7×10^{-6}	39.4×10^{-6}
MK-JCS 38	98 A	4,750	5,950	12,000 / 17,900	325	650	11800	17160	4400	0.60	0.05	542.7×10^{-6}	39.4×10^{-6}
MK-JCS 38	64 D	4,750	5,950	12,000 / 17,900	405	810	26300	40335	6474	0.60	0.05	542.7×10^{-6}	39.4×10^{-6}
MK-JCS 42	92 A	4,000	5,000	10,000 / 15,000	265	530	10870	15680	2430	2.40	0.08	2802×10^{-6}	85×10^{-6}
MK-JCS 42	98 A	4,000	5,000	10,000 / 15,000	450	900	21594	37692	5570	2.40	0.08	2802×10^{-6}	85×10^{-6}
MK-JCS 42	64 D	4,000	5,000	10,000 / 15,000	560	1120	36860	69825	7270	2.40	0.08	2802×10^{-6}	85×10^{-6}
MK-JCS 48	92 A	3,600	4,550	9,100 / 13,600	310	620	12968	18400	2580	3.30	0.09	4709×10^{-6}	135×10^{-6}
MK-JCS 48	98 A	3,600	4,550	9,100 / 13,600	525	1050	25759	45620	5930	3.30	0.09	4709×10^{-6}	135×10^{-6}
MK-JCS 48	64 D	3,600	4,550	9,100 / 13,600	655	1310	57630	99750	8274	3.30	0.09	4709×10^{-6}	135×10^{-6}
MK-JCS 55	92 A	3,150	3,950	— / 11,900	410	820	15482	21375	2980	5.10	0.12	9460×10^{-6}	229×10^{-6}
MK-JCS 55	98 A	3,150	3,950	— / 11,900	685	1370	42117	61550	6686	5.10	0.12	9460×10^{-6}	229×10^{-6}
MK-JCS 55	64 D	3,150	3,950	— / 11,900	825	1650	105730	130200	9248	5.10	0.12	9460×10^{-6}	229×10^{-6}
MK-JCS 65	98 A	2,800	3,500	— / 11,000	940	1880	48520	71660	6418	6.70	0.20	15143×10^{-6}	437×10^{-6}
MK-JCS 65	64 D	2,800	3,500	— / 11,000	1175	2350	118510	189189	8870	6.70	0.20	15143×10^{-6}	437×10^{-6}
MK-JCS 75	98 A	2,350	2,950	— / 8,950	1920	3840	79150	150450	8650	10.5	0.30	32750×10^{-6}	1179×10^{-6}
MK-JCS 75	64 D	2,350	2,950	— / 8,950	2400	4800	182320	316377	11923	10.5	0.30	32750×10^{-6}	1179×10^{-6}
MK-JCS 90	98 A	1,900	2,380	— / —	3600	7200	204500	302900	10700	18.2	0.60	87099×10^{-6}	3362×10^{-6}
MK-JCS 90	64 D	1,900	2,380	— / —	4500	9000	429450	908700	14700	18.2	0.60	87099×10^{-6}	3362×10^{-6}

STIFFNESS & INERTIA MEASUREMENT NOTES • 刚度与转动惯量测试基准

1. Dynamic torsional stiffness applies at operating torque **0.5 × T_{KN}**.
2. Single-hub mass and moment of inertia **J** are calculated based on standard hubs with medium bore diameter.

SHAFT-TO-HUB TORQUE VERIFICATION • 轴与轴套摩擦扭矩校核说明

T_{KN} / T_{Kmax} in the table above refer to the polyurethane spider rating. For keyless clamping or taper-lock hubs, always verify the shaft-hub slip torque **T_R** against the actual shaft diameter and fit tolerance.

MISHKIN

Zero-Backlash Misalignment Compensation Principle • 无齿隙伺服联轴器三向纠偏机理与应力分析

Wear-Free Axial (ΔKa), Radial (ΔKr), and Angular (ΔKw) Misalignment Compensation Under Positive Preload

PRELOADED ZERO-BACKLASH COMPENSATION MECHANISM • 预应力无磨损三向纠偏核心原理

The structural design of the **MK-JCS** coupling enables simultaneous compensation of axial (ΔK_a), radial (ΔK_r), and angular (ΔK_w) shaft misalignments without causing abrasive wear or premature fatigue of the polyurethane spider. Because the spider teeth are subjected purely to positive compressive preload stress, **100% zero-backlash rotation is preserved even after extended service cycles**.

MK-JCS 系列联轴器的结构设计使其能够同时补偿轴向、径向和角向安装偏差，而不会造成弹性体的磨损或提前失效。由于弹性体齿面仅受正压力作用，长时间高速正反转运行后仍能始终保持完全无齿隙传动。

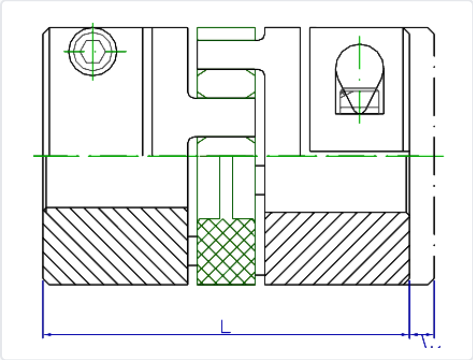

1. AXIAL MISALIGNMENT COMPENSATION (ΔK_a) • 轴向偏差补偿机理

Axial shaft displacement (ΔK_a) arises from assembly dimensional tolerances of mating components or thermal expansion/contraction of motor and ball-screw shafts during operation. Because precision spindle and encoder bearings cannot withstand excessive axial thrust loads, the **MK-JCS** spider absorbs axial length changes smoothly within its axial clearance gap, minimizing axial reaction forces on adjacent bearings.

由于装配时连接件的公差不同，或者由于运行温度变化造成轴向长度的热胀冷缩，从而产生轴向偏差（ΔK_a）。由于精密轴承通常不能承受过大的轴向附加力，因此联轴器通过弹性体轴向游隙平滑补偿轴向偏差，大幅减小对轴承的轴向推力。

2. RADIAL MISALIGNMENT COMPENSATION (ΔK_r) • 径向偏差补偿机理

Radial centerline offset (ΔK_r) occurs when driving and driven shafts are mounted on separate reference surfaces or have concentricity tolerances. Without flexible radial compensation, parallel shaft offset induces severe cyclic bending stresses on shafts and bearings. The preloaded polyurethane spider teeth flex elastically to absorb radial offset while maintaining zero torsional backlash.

由于安装对中的同轴度偏差，或动力源（伺服电机）与从动件安装在不同基准平面上，会产生径向平行偏差（ΔK_r）。若无挠性补偿，这种偏差会在连接轴与轴承上产生剧烈的交变弯曲应力；MK-JCS 依靠预压弹性齿的弹性变形平顺吸收径向偏差。

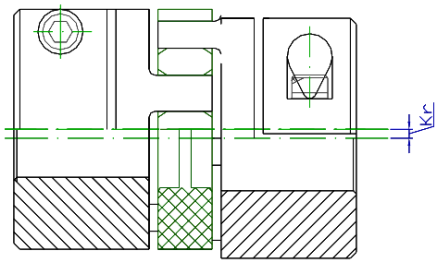

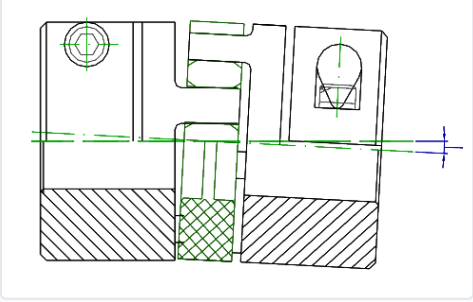

3. ANGULAR MISALIGNMENT COMPENSATION (ΔK_w) • 角向偏差补偿机理

When angular misalignment (ΔK_w) occurs, the centerlines of the driving and driven shafts intersect at the geometric center plane of the coupling spider. Within the permissible angular deviation angle, the crowned involute profile of the spider teeth accommodates angular tilting without edge-loading or localized stress accumulation.

产生角向倾斜偏差（ΔK_w）时，主、从动传动轴的中心线在联轴器的中截面相交。在样本允许的角向偏差范围内，弧形鼓度爪齿与梅花弹性体完美贴合摆动，在补偿角向偏差的同时绝不会产生局部边缘应力集中。

MISHKIN

Standard Misalignment Values Table (MK-JCS 5 – 90) • 无齿隙精密伺服联轴器标准许用偏差补偿量表

Permissible Axial (ΔKa), Radial (ΔKr), and Angular (ΔKw) Deviations at Nominal Torque TKN, n = 1,500 min⁻¹, and T = 30°C

EUROPEAN SERVO STANDARD • 欧洲伺服标准
DIN 740-2 • ISO 286-2 H7 • DIN 6885-1 JS9

SIZES MK-JCS 5 TO MK-JCS 19 • 小规格系列许用偏差表

Model 规格	Spider Hardness 弹性体硬度	Axial ΔK_a [mm] 轴向偏差	Radial ΔK_r [mm] 径向偏差	Angular ΔK_w [°] 角向偏差
MK-JCS 5	80 Sh-A	—	0.12	1.1°
MK-JCS 5	92 Sh-A	+0.4	0.06	1.0°
MK-JCS 5	98 Sh-A	-0.2	0.04	0.9°
MK-JCS 7	80 Sh-A	—	0.15	1.1°
MK-JCS 7	92 Sh-A	+0.6	0.10	1.0°
MK-JCS 7	98 Sh-A	-0.3	0.06	0.9°
MK-JCS 7	64 Sh-D	—	0.04	0.8°
MK-JCS 9	80 Sh-A	—	0.19	1.1°
MK-JCS 9	92 Sh-A	+0.8	0.13	1.0°
MK-JCS 9	98 Sh-A	-0.4	0.08	0.9°
MK-JCS 9	64 Sh-D	—	0.05	0.8°
MK-JCS 12	80 Sh-A	—	0.20	1.1°
MK-JCS 12	92 Sh-A	+0.9	0.14	1.0°
MK-JCS 12	98 Sh-A	-0.4	0.08	0.9°
MK-JCS 12	64 Sh-D	—	0.05	0.8°
MK-JCS 14	80 Sh-A	—	0.21	1.1°
MK-JCS 14	92 Sh-A	+1.0	0.15	1.0°
MK-JCS 14	98 Sh-A	-0.5	0.09	0.9°
MK-JCS 14	64 Sh-D	—	0.06	0.8°
MK-JCS 19	80 Sh-A	—	0.15	1.1°
MK-JCS 19	92 Sh-A	+1.2	0.10	1.0°
MK-JCS 19	98 Sh-A	-0.5	0.06	0.9°
MK-JCS 19	64 Sh-D	—	0.04	0.8°

SIZES MK-JCS 24 TO MK-JCS 90 • 中大规格系列许用偏差表

Model 规格	Spider Hardness 弹性体硬度	Axial ΔK_a [mm] 轴向偏差	Radial ΔK_r [mm] 径向偏差	Angular ΔK_w [°] 角向偏差
MK-JCS 24	92 Sh-A	—	0.14	1.0°
MK-JCS 24	98 Sh-A	+1.4	0.10	0.9°
MK-JCS 24	64 Sh-D	-0.5	0.07	0.8°
MK-JCS 28	92 Sh-A	—	0.15	1.0°
MK-JCS 28	98 Sh-A	+1.5	0.11	0.9°
MK-JCS 28	64 Sh-D	-0.7	0.08	0.8°
MK-JCS 38	92 Sh-A	—	0.17	1.0°
MK-JCS 38	98 Sh-A	+1.8	0.12	0.9°
MK-JCS 38	64 Sh-D	-0.7	0.09	0.8°
MK-JCS 42	92 Sh-A	—	0.19	1.0°
MK-JCS 42	98 Sh-A	+2.0	0.14	0.9°
MK-JCS 42	64 Sh-D	-1.0	0.10	0.8°
MK-JCS 48	92 Sh-A	—	0.23	1.0°
MK-JCS 48	98 Sh-A	+2.1	0.16	0.9°
MK-JCS 48	64 Sh-D	-1.0	0.11	0.8°
MK-JCS 55	92 Sh-A	—	0.24	1.0°
MK-JCS 55	98 Sh-A	+2.2	0.17	0.9°
MK-JCS 55	64 Sh-D	-1.0	0.12	0.8°
MK-JCS 65	98 Sh-A	+2.6	0.18	0.9°
MK-JCS 65	64 Sh-D	-1.0	0.13	0.8°
MK-JCS 75	98 Sh-A	+3.0	0.21	0.9°
MK-JCS 75	64 Sh-D	-1.5	0.15	0.8°
MK-JCS 90	98 Sh-A	+3.4	0.23	0.9°
MK-JCS 90	64 Sh-D	-1.5	0.17	0.8°

REFERENCE OPERATING CONDITIONS • 表列偏差值的基准工况说明

1. The permissible misalignment values listed in the tables above are standard maximum values for **MK-JCS** couplings operating at nominal rated torque T_{KN}, rotational speed **n = 1,500 min⁻¹ (rpm)**, and ambient temperature **T = +30°C**.
上表所列的偏差补偿量为 MK-JCS 型联轴器的标准值，相应基准工况为：传递额定扭矩 T_{KN}、工作转速 n = 1500 r/min、环境温度 30°C。

COMBINED MISALIGNMENT DE-RATING RULE • 三向复合偏差递减法则

2. Each listed value represents the maximum allowable single-axis deviation. When axial (ΔK_a), radial (ΔK_r), and angular (ΔK_w) deviations occur simultaneously, each single deviation must be reduced proportionally so that $(\Delta K_{r,act} / \Delta K_{r,max}) + (\Delta K_{w,act} / \Delta K_{w,max}) \leqslant 100\%$. Better shaft alignment directly extends service life.
以上各偏差补偿量仅为单项极限值；若三个方向同时存在偏差，各项偏差值需按比例递减。安装时连接轴的对中性越好，联轴器的使用寿命越长。

MISHKIN

Coupling Selection Symbols & Coefficient Definitions • 联轴器选型计算中的符号定义与系数说明 (DIN 740-2)

Engineering Terminology & Physical Quantities for Servo Drive & Spindle Coupling Sizing

1. SYMBOL & COEFFICIENT DEFINITIONS FOR COUPLING SELECTION • 联轴器选型中的符号定义和系数说明表

In Accordance with DIN 740-2

Symbol 符号	Parameter Designation 参数中英文名称与单位	Engineering Definition & Selection Guideline 工程物理意义与选型取用说明
T_{KN}	Coupling Rated Torque [Nm] • 联轴器的额定扭矩	Continuous transmissible torque within the permitted speed range, taking into account operating temperature factor S_t and torsional rigidity factor S_d. 在规定的转速范围内连续运转时允许传递的额定扭矩，选型时应考虑工况系数（S_t, S_d）。
T_{Kmax}	Coupling Maximum Peak Torque [Nm] • 联轴器的最大扭矩	Permissible peak load occurring up to 10^5 unidirectional load cycles or 5×10^4 alternating load cycles over the coupling's service life, accounting for factors (S_t, S_d, S_A/S_L). 在联轴器整个工作寿命中传递少于 10^5 次单向载荷或 5×10^4 次交变载荷的许用峰值扭矩，应考虑工况系数（S_t, S_d, S_A）。
T_R	Frictional Slip Torque [Nm] • 摩擦传递力矩	Transmissible frictional torque of keyless clamping hubs (DK, KC) or conical taper clamping rings (ZT) between shaft and hub bore. 轴与无键夹紧轴套（DK、KC）或胀紧套（ZT）仅靠摩擦力夹紧连接时所能可靠传递的扭矩。
T_{AN}	Prime Mover Rated Torque [Nm] • 主动端额定力矩	Nominal driving torque calculated from motor rated power P [kW] and rotational speed n [min^{-1}]: $T_{AN} = 9550 \times P / n$. 主动端（原动机/伺服电机）的额定工作力矩，由额定功率和转速计算得到。
T_{AS}	Prime Mover Peak / Stall Torque [Nm] • 主动端最大动电力矩	Peak torque generated on the driving side during AC/servo motor start-up, emergency braking, or peak acceleration. 交流电机或伺服电机在启动、急停或最大加减速瞬间产生的峰值动态力矩。
T_S	System Peak Shock Torque [Nm] • 联轴器峰值冲击力矩	Peak shock torque acting on the coupling, calculated from max driving torque T_{AS}, inertia ratio factor m_A (or m_L), and shock factor S_A (or S_L). 根据最大动电力矩 T_{AS}、转动惯量分配系数 m_A（或 m_L）和冲击系数 S_A（或 S_L）计算得出的峰值力矩。
S_t	Temperature Factor • 温度系数	Accounts for decreased polyurethane elastomer shear modulus under elevated ambient temperature. Above +80°C (+110°C for 64 ShD), metallic disc or bellows couplings are recommended. 需考虑聚氨酯弹性体在高温环境受压下物理性能的变化；若长期环境温度超过弹性体极限，建议改用米什金全金属膜片或波纹管联轴器。
S_d	Torsional Rigidity Factor • 扭转刚性系数	Accounts for different positioning and resonance requirements across machine tool spindles (2–5), X-Y-Z positioning axes (3–8), and encoders (10). 考虑不同应用场合对联轴器扭转刚性的不同要求（如机床主轴取 2~5，定位进给轴取 3~8，编码器取 10）。
S_A / S_L	Shock / Impulse Load Factor • 冲击载荷系数	Service factor accounting for start-up frequency and mechanical shock severity on the driving end (S_A) or driven load end (S_L). 在主动端或从动端受到频繁启停或机械冲击时需考虑的冲击载荷安全系数。
m_A / m_L	Rotational Inertia Distribution Factor • 主/从动端转动惯量系数	Mass/inertia distribution ratio between driving and driven sides during acceleration or impact: $m_A = J_L / (J_A + J_L)$; $m_L = J_A / (J_A + J_L)$. 主动端（或从动端）受冲击或加减速振动时需考虑的转动惯量质量分布系数。
J_A / J_L	Driving / Driven Moment of Inertia [kg • m^2] • 联轴器主动端/从动端转动惯量	Total rotational moment of inertia of the driving side (motor + driving hub, J_A) and driven load side (ball screw + load + driven hub, J_L). 主动端（电机侧）总转动惯量 J_A 与从动端（负载/丝杠侧）总转动惯量 J_L。
T_A	Screw Tightening Torque [Nm] • 螺钉规定拧紧力矩	Mandatory tightening torque for radial clamping screws (KC/DK) or axial taper-lock screws (ZT) using a calibrated torque wrench. 夹紧轴套锁紧螺钉或胀紧套螺栓在安装时必须达到的规定拧紧力矩 [Nm]。

MISHKIN

Working Condition Coefficients & Selection Formulas • 工况安全系数表与无齿隙联轴器选型校核公式

Temperature Factor (St), Torsional Rigidity Factor (Sd), Shock Factor (SA/SL) & DIN 740-2 Sizing Equations

EUROPEAN SERVO STANDARD • 欧洲伺服标准
DIN 740-2 • ISO 286-2 H7 • DIN 6885-1 JS9

TEMPERATURE FACTOR S_t (80 / 92 / 98 ShA) • 标准聚氨酯温度系数

Temp. T_{amb} 环境温度	−30°C ~ +30°C	+40°C	+60°C	+80°C
Factor S_t	1.0	1.2	1.4	1.8

TEMPERATURE FACTOR S_t (64 ShD Green) • 64SHD 高温型温度系数

Temp. T_{amb} 环境温度	−30°C ~ +30°C	+40°C	+60°C	+80°C	+100°C	+120°C
Factor S_t	1.0	1.2	1.4	1.6	2.0	2.8

TORSIONAL RIGIDITY FACTOR S_d • 扭转刚性系数表

Machine Tool Main Spindle 机床主轴传动	Positioning Drive (X-Y-Z Axes) 定位进给传动 (X-Y 轴)	Rotary Encoder / Tachometer 编码器与测量系统
2 – 5	3 – 8	10

Note • 重要提示: When using the ultra-rigid **64 Shore D (Green)** spider, the torsional rigidity factor **S_d must be at least ⩾ 4.** (当使用 64SHD 弹性体时，系数 S_d 至少取 4。)

IMPACT / START-UP LOAD FACTOR S_A • 冲击与启动频率载荷系数表

Machine Spindle Duty 机床主轴传动冲击	Positioning Starts / min 定位传动启动次数/分钟	Factor S_A 冲击系数 S_A
Slight Impact • 轻微冲击	⩽ 60 starts/min	1.0
Regular Impact • 一般冲击	> 60 to ⩽ 300 starts/min	1.4
Severe Impact • 严重冲击	> 300 starts/min	1.8

3. DIN 740-2 COMPUTATIONAL VERIFICATION FORMULAS • 联轴器选型计算与校核公式

CONDITION 1: CONTINUOUS & PEAK SPIDER TORQUE VERIFICATION • 额定扭矩与最大峰值扭矩必须同时满足下列条件

(1) $T_{KN} \geqslant T_{AN} \times S_t \times S_d$ and / 和 (2) $T_{Kmax} \geqslant T_S \times S_t \times S_d$ (plus Frictional Slip Check: $T_R \geqslant T_{Kmax}$)

CONDITION 2: PEAK IMPACT TORQUE T_S CALCULATION • 主动端冲击与从动端冲击峰值力矩 T_S 计算公式

- Driving-Side Impact Torque (主动端冲击力矩): $T_S = T_{AS} \times m_A \times S_A$ where $m_A = J_L / (J_A + J_L)$
- Driven-Side Impact Torque (主从动端/负载侧冲击力矩): $T_S = T_{LS} \times m_L \times S_L$ where $m_L = J_A / (J_A + J_L)$

CONDITION 3: RESONANCE & TORSIONAL NATURAL FREQUENCY CHECK • 扭转固有频率校核 (TWO-MASS SYSTEM)

System natural torsional frequency: $f_e = (1 / 2\pi) \times \sqrt{[\, C_{Tdyn} \times (J_A + J_L) / (J_A \times J_L)\,]}$ [Hz]. Ensure excitation frequency avoids 0.8 f_e – 1.2 f_e.

通过合理匹配弹性体动态扭转刚度 C_{Tdyn}，使系统扭转固有频率避开电机与主轴的工作激励频率区。

MISHKIN

Servo Coupling Hub Connection Types (Part I) • 无齿隙精密伺服联轴器轴套形式总览（一）

Standard Set-Screw Hubs & MK-JCS-DK Single-Slit Radial Clamping Hubs (With or Without Keyway)

EUROPEAN SERVO STANDARD • 欧洲伺服标准
DIN 740-2 • ISO 286-2 H7 • DIN 6885-1 JS9

MK-JCS zero-backlash couplings offer 9 specialized hub connection designs tailored to different shaft mounting conditions, speeds, and torque levels. The fundamental difference lies in whether torque is transmitted via positive feather key engagement (**DIN 6885-1 JS9**) or pure 360° frictional clamping pressure.
MK-JCS 系列联轴器针对不同的安装工况提供多种不同型式的轴套供选择。各型式最大的不同在于依靠平键传递扭矩，或是依靠开槽夹紧/锥套胀紧摩擦力实现无键零背隙传递扭矩。

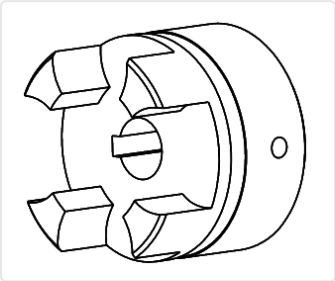

1. MK-JCS STANDARD HUB — WITH KEYWAY & SET SCREW • 标准型带键槽和紧定螺钉

Torque Transmission: Positive drive via parallel keyway (**DIN 6885-1 JS9**) plus axial retention via radial set screw (**ISO 4029 / DIN 916**). Permissible torque is governed by the allowable surface pressure on the keyway flank. *Note: Not recommended for heavy-load reversing servo drives requiring absolute zero keyway fretting.*
依靠平键与键槽传递扭矩，许用力矩取决于键槽表面的许用挤压应力，并配紧定螺钉做轴向定位。需注意该种纯键槽结构不适用于要求完全无齿隙的重载高频正反转冲击场合。

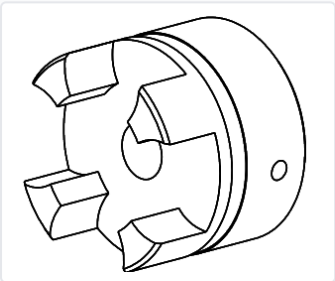

2. MK-JCS STANDARD HUB — SET SCREW ONLY, NO KEYWAY • 标准型不带键槽仅带紧定螺钉

Torque Transmission: Direct radial set-screw locking against a smooth cylindrical shaft (or shaft flat). Suitable exclusively for miniature, low-torque instrumentation, rotary encoders, and light measurement drives requiring zero backlash.
直接通过径向紧定螺钉顶紧光轴传递扭矩。专用于要求无间隙的微小力矩传递场合（如微型编码器、电位计及轻载仪器轴联接）。

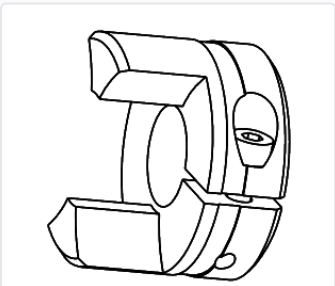

3. MK-JCS-DK CLAMPING HUB — SINGLE-SLIT, NO KEYWAY • DK 单开槽夹紧型（不带键槽）

Torque Transmission: Pure friction-grip clamping via a tangential socket head cap screw (**ISO 4762**). Achieves **100% zero-backlash shaft-to-hub connection** without marring the shaft. Transmissible slip torque T_R depends on the actual shaft diameter.
完全依靠单开槽环向夹紧摩擦力连接传动，轴与轴套之间实现 100% 无齿隙抱紧，不伤轴面。可传递的摩擦扭矩取决于实际装配轴径大小。

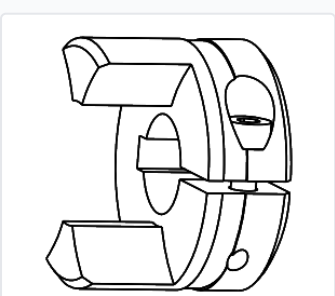

4. MK-JCS-DK CLAMPING HUB — SINGLE-SLIT WITH KEYWAY • DK 单开槽夹紧型（带平键槽）

Torque Transmission: Combines positive feather keyway drive (**DIN 6885-1 JS9**) with tangential clamping friction. Eliminates keyway play/backlash during reversing motion and dramatically reduces fretting contact stress on the keyway sidewalls.
平键与键槽传递扭矩，同时附加单开槽夹紧摩擦力共同传动，彻底消除了正反转时的键槽反向间隙，并大幅降低了键与键槽侧面的接触挤压应力。

Servo Coupling Hub Connection Types (Part II) • 无齿隙精密伺服联轴器轴套形式总览（二）

MK-JCS-KC Double-Slit Clamping Hubs & MK-JCS-ZT Integrated Conical Taper Clamping Ring Hubs

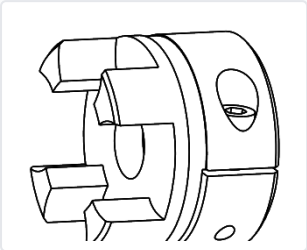

5. MK-JCS-KC CLAMPING HUB — DOUBLE-SLIT, NO KEYWAY • KC 双开槽夹紧型（不带键槽）

Torque Transmission: Dual-slit symmetric clamping hub with higher clamping force and better concentric balance than single-slit hubs. Zero-backlash frictional connection; transmissible torque T_R is determined by shaft bore diameter.

双开槽夹紧摩擦力连接传动，轴与轴套连接完全无齿隙，对称性及夹紧力优于单开槽型。可传递的摩擦力矩取决于所配轴径。

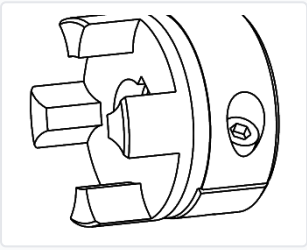

6. MK-JCS-KC CLAMPING HUB — DOUBLE-SLIT WITH KEYWAY • KC 双开槽夹紧型（带平键槽）

Torque Transmission: Positive parallel keyway (**DIN 6885-1 JS9**) combined with dual-slit radial clamping friction. Prevents keyway backlash under alternating servo loads and reduces keyway contact pressure.

平键和键槽传递扭矩，附加双开槽夹紧摩擦力联合传动，有效消除正反转反向间隙并显著降低键槽侧面的接触应力，适合大扭矩伺服进给轴。

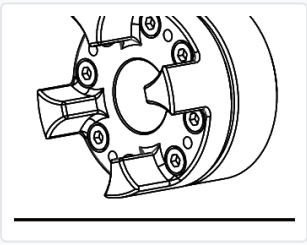

7. MK-JCS-ZT-AL — ALUMINUM CONICAL TAPER CLAMPING RING HUB • 铝质一体式胀紧套型

Torque Transmission: Integrated 360° conical taper clamping ring in high-strength wrought aluminum alloy (**EN AW-7075 T6**). Axisymmetric design with ultra-low rotational inertia and perfect dynamic balance for high-speed servo drives (up to **v = 40 m/s**).

一体式锥面胀紧套无键连接传动，轴套与外锥环材质均为高强度铝合金，具有极高的同轴度与极低转动惯量，专用于高转速、低转动惯量的精密主轴与伺服场合。

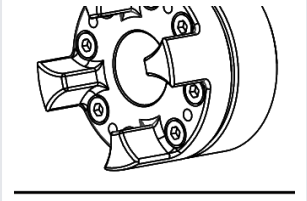

8. MK-JCS-ZT-S — STEEL CONICAL TAPER CLAMPING RING HUB • 钢质一体式胀紧套型

Torque Transmission: Integrated conical taper clamping sleeve machined from high-strength steel (**C45E / 42CrMo4**), with axial pull-up screws accessed from the inner spider cavity side. Engineered for high peripheral speeds (**v ⩽ 50 m/s**) and maximum spindle torque.

一体式高强度钢质胀紧套连接传动，胀紧螺丝位于弹性体腔体内侧，结构紧凑、回转平衡性极佳，适用于高转速（线速度可达 50 m/s）与更高扭矩的重载机床主轴场合。

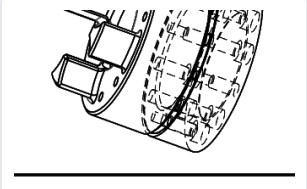

9. MK-JCS-ZTW — EXTERNAL-SCREW CONICAL CLAMPING RING HUB • 外置螺栓特殊胀紧套结构

Torque Transmission: Identical conical interference clamping principle to the **ZT** series, except the axial clamping bolts are accessed from the **outer rear face** of the hub—allowing radial torque-wrench tightening after both hubs are already mated with the spider.

工作原理与 ZT 型一体式胀紧套相同，区别在于胀紧螺栓布置在轴套外端面侧，便于在联轴器合装到位后直接从外部拧紧或拆卸螺栓。

Zero-Backlash Set-Screw Servo Jaw Coupling • 无齿隙标准型梅花精密联轴器 (MK-JCS 9 – 90)

High-Strength Aluminum Alloy Hubs (Sizes 5–38) & C45E Steel Hubs (Sizes 42–90) • Bore ISO H7 & Keyway DIN 6885-1 JS9

EUROPEAN SERVO STANDARD • 欧洲伺服标准
DIN 740-2 • ISO 286-2 H7 • DIN 6885-1 JS9

PRODUCT & CAD DRAWINGS • 实物图与 B型 / A型 轴套结构尺寸图



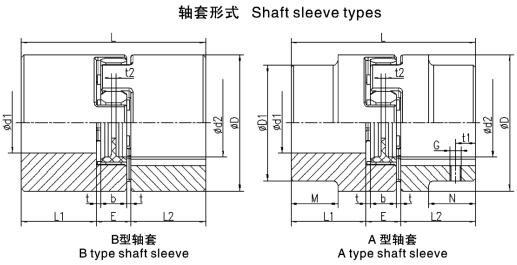

Type B Hub (Sizes 9–38): Full-OD Cylindrical Hub
Type A Hub (Sizes 42–90): Stepped Boss Hub (D_1 < D)

TECHNICAL CHARACTERISTICS • 产品技术特点与材料规范

1. ZERO-BACKLASH MEASUREMENT & POSITIONING • 无齿隙精密测量传动
Preloaded polyurethane spider ensures zero-backlash rotation with compact dimensions, low rotational inertia, and maintenance-free visual inspection.
无齿隙连接，专用于小扭矩精密测量传动与定位控制；尺寸小、转动惯量低、免维护且便于目测检查。

2. HUB MATERIAL BY SIZE • 按规格分段优选轴套材质
Sizes MK-JCS 5 to 38: High-strength wrought aluminum alloy (EN AW-7075 / 6061). Sizes MK-JCS 42 to 90: C45E Carbon Steel (EN 1.1191).
5~38 规格轴套材质采用高强度铝合金，42~90 规格轴套材质采用优质碳素钢 (C45E)。

3. BORE & KEYWAY STANDARD • 欧标孔径与键槽公差
Finished bore tolerance ISO 286-2 H7; for bores > Ø6 mm, optional parallel keyway acc. to DIN 6885-1 JS9.
成品孔公差按照 ISO 标准 H7，孔径 Ø6 以上可按 DIN 6885-1 标准加工平键槽（键槽宽公差 JS9）。

DIMENSIONAL & TORQUE TABLE — MK-JCS STANDARD SERIES • 无齿隙标准型梅花联轴器技术参数与尺寸表 [mm]

Sizes 5–38: High-Strength Aluminum Alloy | Sizes 42–90: C45E Steel

Model 型号	Rated Torque T_{KN} [Nm] 弹性体额定扭矩 [Nm]			Dimensions • 外形与安装尺寸 [mm]											Set Screw (ISO 4029) 定位螺丝标准型结构	
	92 ShA	98 ShA	64 ShD	$d1_{max}$	D1	D	d2	L	L1, L2	M, N	E	b	t	t_2	Thread G	Pos. t_1
MK-JCS 9	3.0	5.0	6.0	11	—	20	7.2	30	10	—	10	8	1.0	1.5	M4	5
MK-JCS 12	5.0	9.0	12.0	12	—	25	8.5	34	11	—	12	10	1.0	3.5	M4	5
MK-JCS 14	7.5	12.5	16.0	16	—	30	10.5	35	11	—	13	10	1.5	2.0	M4	5
MK-JCS 19	10	17	21	24	—	41	18.0	66	25	—	16	12	2.0	3.0	M5	10
MK-JCS 24	35	60	75	28	—	56	27.0	78	30	—	18	14	2.0	3.0	M5	10
MK-JCS 28	95	160	200	38	—	66	30.0	90	35	—	20	15	2.5	4.0	M8	15
MK-JCS 38	190	325	405	45	—	80	38.0	114	45	—	24	18	3.0	4.0	M8	15
MK-JCS 42	265	450	560	55	85	95	46.0	126	50	28	26	20	3.0	4.0	M8	20
MK-JCS 48	310	525	655	62	95	105	51.0	140	56	32	28	21	3.5	4.0	M8	20
MK-JCS 55	410	685	825	74	110	120	60.0	160	65	37	30	22	4.0	4.5	M10	20
MK-JCS 65	—	940	1175	80	115	135	68.0	185	75	47	35	26	4.5	4.5	M10	20
MK-JCS 75	—	1920	2400	95	135	160	80.0	210	85	53	40	30	5.0	5.0	M10	25
MK-JCS 90	—	3600	4500	110	160	200	104.0	245	100	62	45	34	5.5	6.5	M12	30

ORDERING CODE EXAMPLE • 选型编码示例: MK-JCS38 - 24 - A/B - 24 - A/B - 98 - S - BL - J

Specify Bore Diameter, Hub Style (A/B), Spider Hardness, Material & Keyway

MK-JCS38	24	A / B	24	A / B	98	S	BL	J	—
Model Size 产品规格	**Left Bore** 左孔径 Ø24	Left Hub Type 左轴套形式	**Right Bore** 右孔径 Ø24	Right Hub Type 右轴套形式	**98 ShA Spider** 弹性体硬度	**Steel Material** 材料 (S:钢 / AL:铝)	Black Oxide 表面发黑 (BL)	With Keyway 带平键槽 (J)	Special Note 特殊要求

MISHKIN

Double-Slit Clamping Zero-Backlash Servo Coupling • 双开槽夹紧型无齿隙精密伺服联轴器 (MK-JCS-KC)

Backlash-Free Radial Clamping Hubs for Ball Screws, Lifting Platforms & Machine Tool Feed Axes

EUROPEAN SERVO STANDARD • 欧洲伺服标准
DIN 740-2 • ISO 286-2 H7 • DIN 6885-1 JS9

PRODUCT & CAD DRAWING • 双开槽夹紧型实物图与结构尺寸图 (MK-JCS-KC)

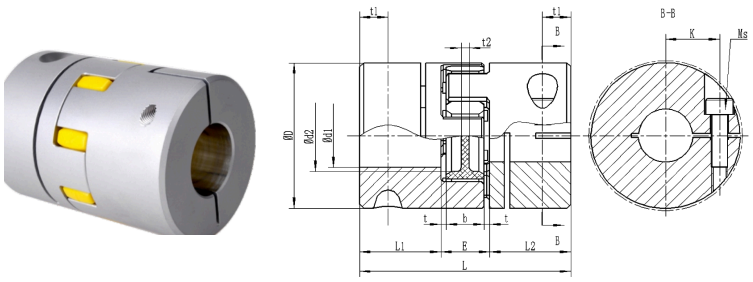

KC Design: Double-Slit Clamping Hub with Tangential Screw M_S (ISO 4762 Class 12.9)

TECHNICAL CHARACTERISTICS • 产品技术特点与标准

1. ZERO-BACKLASH CLAMPING FOR SERVO AXES • 双开槽无齿隙抱紧传动
Double-slit clamping hub tightened via high-tensile socket head cap screws completely eliminates radial clearance between shaft and hub bore—ideal for servo ball screws, lifting platforms, and CNC feed axes.
无齿隙连接，专用于精密测量传动、升降平台和数控机床进给传动等；双开槽后利用高强度螺钉抱紧，彻底消除轴孔间隙。

2. HUB MATERIALS BY SIZE • 铝合金与优质碳钢分段制造
Sizes MK-JCS 19-KC to 38-KC: High-strength aluminum alloy (EN AW-7075 / 6061, anodized). Sizes MK-JCS 42-KC to 90-KC: C45E Carbon Steel (EN 1.1191).
19~38 规格轴套材质为高强度铝合金（表面阳极氧化），42~90 规格轴套材质为优质碳素钢 (C45E)。

3. BORE & OPTIONAL KEYWAY • 欧标孔径公差与键槽
Finished bore tolerance ISO 286-2 H7; optional parallel keyway acc. to DIN 6885-1 JS9.
成品孔径公差按照 ISO 标准 H7，可选配平键槽（公差按照 DIN 6885-1 标准 JS9）。

DIMENSIONAL & TORQUE TABLE — MK-JCS-KC SERIES • 双开槽夹紧型无齿隙伺服联轴器尺寸与锁紧力矩表

Clamping Screws: ISO 4762 (DIN 912) Class 12.9

Model 型号	Rated Torque T_{KN} [Nm] 弹性体额定扭矩 [Nm]			Dimensions • 外形与安装尺寸 [mm]										Clamping Screw 锁紧螺钉 (ISO 4762)	
	92 ShA	98 ShA	64 ShD	D	Bore d_1 (min–max)	d_2	L	L1, L2	E	k	b	t	t_1	t_2	Size M_S 螺钉规格	Torque T_A 锁紧力矩 [Nm]
MK-JCS 19-KC	10	17	21	41	8 – 22	18	66	25	16	14.5	12	2.0	11	3.0	M6	10.5
MK-JCS 24-KC	35	60	75	56	10 – 28	27	78	30	18	20.0	14	2.0	10.5	3.0	M6	10.5
MK-JCS 28-KC	95	160	200	66	14 – 38	30	90	35	20	25.0	15	2.5	11.5	4.0	M8	25.0
MK-JCS 38-KC	190	325	405	80	15 – 45	38	114	45	24	30.0	18	3.0	15.5	4.0	M8	25.0
MK-JCS 42-KC	265	450	560	95	20 – 50	46	126	50	26	32.0	20	3.0	18.0	4.0	M10	69.0
MK-JCS 48-KC	310	525	655	105	25 – 55	51	140	56	28	36.0	21	3.5	21.0	4.0	M12	120
MK-JCS 55-KC	410	685	825	120	32 – 65	60	160	65	30	42.5	22	4.0	26.0	4.5	M12	120
MK-JCS 65-KC	—	940	1175	135	35 – 70	68	185	75	35	45.0	26	4.5	33.0	4.5	M12	120
MK-JCS 75-KC	—	1920	2400	160	42 – 80	80	210	85	40	51.0	30	5.0	36.0	5.0	M16	295
MK-JCS 90-KC	—	3600	4500	200	42 – 90	104	245	100	45	60.0	34	5.5	40.0	6.5	M20	580

ORDERING CODE EXAMPLE • 选型编码示例: MK-JCS38 - 24 - A/B - 24 - A/B - 98 - AL - YJ - KC

YJ = Anodized Aluminum Surface Treatment (阳极氧化)

MK-JCS38	24	A / B	24	A / B	98	AL	YJ	KC	—
Model Size 产品规格	Left Bore 左孔径 Ø24	Left Hub Type 左轴套形式	Right Bore 右孔径 Ø24	Right Hub Type 右轴套形式	98 ShA Spider 弹性体硬度	Aluminum Alloy 材料 (AL:铝 / S:钢)	Anodized Finish 阳极氧化 (YJ)	Double-Slit Hub 双开槽结构 (KC)	Special Note 备注

MISHKIN

Single-Slit Clamping Zero-Backlash Servo Coupling • 单开槽夹紧型无齿隙精密伺服联轴器 (MK-JCS-DK)

Compact Short-Envelope Aluminum Clamping Hubs (Sizes 9–28) for Servo Actuators & Precision Encoders

EUROPEAN SERVO STANDARD • 欧洲伺服标准
DIN 740-2 • ISO 286-2 H7 • DIN 6885-1 JS9

PRODUCT & CAD DRAWING • 单开槽夹紧型实物图与结构尺寸图 (MK-JCS-DK)



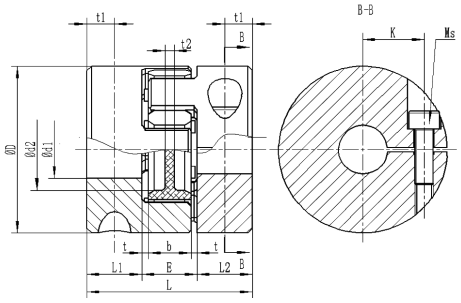

DK Compact Design: Reduced Overall Length **L** for Space-Constrained Servo Motor Housings

TECHNICAL CHARACTERISTICS • 产品技术特点与标准

1. COMPACT AXIAL ENVELOPE & LOW INERTIA • 超短轴向总长与低惯量
Compared to the double-slit KC series, MK-JCS-DK features a single radial slit and shorter hub length L_1 / L_2 (e.g., L = 50 mm vs. 66 mm on size 19), saving valuable axial installation space.
采用单开槽紧凑型夹紧结构，轴向总长 L 比 KC 型更短，尺寸小、转动惯量极低，非常适合安装空间受限的精密线性模组与伺服电缸。

2. WROUGHT ALUMINUM ALLOY CONSTRUCTION • 全系列高强度铝合金制造
All sizes MK-JCS 9-DK to 28-DK are CNC machined from high-strength wrought aluminum alloy (EN AW-7075 T6 / 6061 T6) with anodized finish.
5~28 规格轴套材质均采用高强度铝合金制造，表面经阳极氧化防腐蚀处理，轻量化且免维护。

3. BORE & KEYWAY TOLERANCE • 欧标孔径公差与选配键槽
Finished bore tolerance ISO 286-2 H7 (keyless friction clamping standard); for bores above Ø6 mm, optional keyway acc. to DIN 6885-1 JS9.
成品孔公差按照 ISO 标准 H7；孔径 Ø6 以上可按客户需求加工 DIN 6885-1 标准 JS9 平键槽。

DIMENSIONAL & TORQUE TABLE — MK-JCS-DK SERIES • 单开槽夹紧型无齿隙伺服联轴器尺寸与锁紧力矩表

Material: High-Strength Aluminum Alloy | Screws: ISO 4762 Class 12.9

Model 型号	Rated Torque T_{KN} [Nm] 弹性体额定扭矩 [Nm]			Dimensions • 外形与安装尺寸 [mm]										Clamping Screw 锁紧螺钉 (ISO 4762)	
	92 ShA	98 ShA	64 ShD	D	Bore d_1 (min–max)	d_2	L	L1, L2	E	k	b	t	t_1	t_2	Size M_S 螺钉规格	Torque T_A 锁紧力矩 [Nm]
MK-JCS 9-DK	3.0	5.0	6.0	20	4 – 11	7.2	30	10	10	7.5	8	1.0	5.0	1.5	M2.5	0.76
MK-JCS 12-DK	5.0	9.0	12.0	25	5 – 12	8.5	34	11	12	9.0	10	1.0	5.0	3.5	M3	1.34
MK-JCS 14-DK	7.5	12.5	16.0	30	5 – 16	10.5	35	11	13	11.5	10	1.5	5.0	2.0	M3	1.34
MK-JCS 19-DK	10.0	17.0	21.0	41	8 – 24	18.0	50	17	16	14.0	12	2.0	6.0	3.0	M6	10.5
MK-JCS 24-DK	35.0	60.0	75.0	56	10 – 28	27.0	54	18	18	20.0	14	2.0	7.0	3.0	M6	10.5
MK-JCS 28-DK	95.0	160	200	66	14 – 38	30.0	62	21	20	23.8	15	2.5	9.0	4.0	M8	25.0

ORDERING CODE EXAMPLE • 选型编码示例: MK-JCS28 - 24 - A/B - 24 - A/B - 98 - AL - YJ - DK

DK = Single-Slit Clamping Servo Hub

MK-JCS28	24	A / B	24	A / B	98	AL	YJ	DK	—
Model Size 产品规格	**Left Bore** 左孔径 Ø24	Left Hub Type 左轴套形式	**Right Bore** 右孔径 Ø24	Right Hub Type 右轴套形式	**98 ShA Spider** 弹性体硬度	**Aluminum Alloy** 材料 (AL)	Anodized Finish 阳极氧化 (YJ)	**Single-Slit Hub** 单开槽结构 (DK)	Special Note 备注

SHAFT SURFACE & FIT REQUIREMENT • 安装轴面粗糙度与公差要求

For keyless friction clamping with **MK-JCS-DK** and **MK-JCS-KC** hubs, machine the mating shaft diameter to **ISO 286-2 k6 / h6** with surface roughness **Ra 0.8 – 1.6 µm**. Degrease shaft and bore surfaces before tightening.

TORQUE WRENCH TIGHTENING • 扭矩扳手规范锁紧

Always use a calibrated torque wrench to tighten clamping screw M_S to the exact tightening torque T_A [Nm] specified in the table above.

MISHKIN

Aluminum Taper-Lock Ring Servo Jaw Coupling • 铝质一体式胀紧套型无齿隙伺服联轴器 (MK-JCS-ZT-AL)

Axisymmetric Conical Shrink-Fit Clamping Sleeve in High-Strength Aluminum Alloy for High-Speed Spindles

EUROPEAN SERVO STANDARD • 欧洲伺服标准
DIN 740-2 • ISO 286-2 H7 • DIN 6885-1 JS9

PRODUCT & CAD DRAWING • 铝质胀紧套型实物图与结构尺寸图 (MK-JCS-ZT-AL)



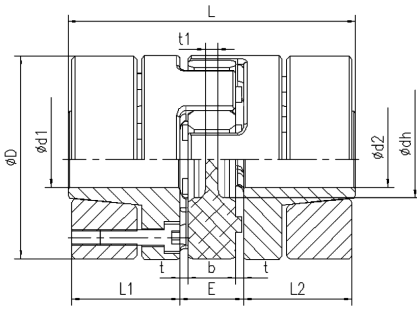

Integrated Taper Ring: Internal Axial Clamping Screws **M** + Pull-Off Threads **M_1**

TECHNICAL CHARACTERISTICS • 产品技术特点与结构优势

1. INTEGRATED CONICAL TAPER CLAMPING • 无齿隙、高精度的胀紧套一体化设计

360° axisymmetric conical clamping ring eliminates radial clamping slits, providing superior concentricity and high friction torque for machine tool spindles, rolling mills, and high-speed material handling equipment.

无齿隙、高精度的锥面胀紧套一体化设计，广泛应用于机床主轴传动、轧机驱动和高速搬运设备等场合。

2. ULTRA-LOW INERTIA HIGH-STRENGTH ALUMINUM • 高强度铝合金轴套与胀紧环

Both the coupling hub and conical taper ring are machined from high-strength wrought aluminum alloy (EN AW-7075 T6), combining light weight with minimal rotational moment of inertia J.

轴套与外锥胀紧环材料均为高强度铝合金，重量轻、转动惯量极小，动态响应极快。

3. INTERNAL CLAMPING BOLTS & PULL-OFF THREADS M1 • 内侧胀紧螺栓与拆卸螺纹 M1

Internal axial clamping screws expand and shrink the taper sleeve smoothly; dedicated pull-off threads M_1 located between the clamping screws enable effortless disassembly.

胀紧套一体化与内侧胀紧螺栓使安装方便，摩擦力矩大；胀紧螺栓之间设有专用拆卸螺纹孔 M_1。

DIMENSIONAL, CLAMPING & INERTIA TABLE — MK-JCS-ZT-AL SERIES • 铝质胀紧套型联轴器技术参数与尺寸表

Hub & Taper Ring Material: High-Strength Aluminum Alloy (EN AW-7075 T6)

Model 型号	Rated Torque T_{KN} [Nm] 弹性体扭矩 [Nm]			Dimensions • 尺寸 [mm]							Taper Clamping Screws • 胀紧螺栓				Single Hub Mass 最大孔径时单轴套重 [kg]	Single Hub Inertia J 最大孔径时单轴套惯量 [kg • m²]
	92 ShA	98 ShA	64 ShD	Bore d_1 (min–max)	D	d_h	L	L1, L2	E	b	t_1	Screw M 螺栓	Qty Z 数量	T_A [Nm] 锁紧力矩	Pull-Off M_1 拆卸螺纹		
MK-JCS 14-ZT-AL	7.5	12.5	16.0	6 – 14	30	10.5	50	18.5	13	10	2.0	M3	4	1.34	M3	0.032	0.04×10^{-4}
MK-JCS 19-ZT-AL	10.0	17.0	21.0	10 – 20	41	18.0	66	25.0	16	12	3.0	M4	6	3.00	M4	0.077	0.19×10^{-4}
MK-JCS 24-ZT-AL	35.0	60.0	75.0	14 – 28	56	27.0	78	30.0	18	14	3.0	M5	4	6.00	M5	0.162	0.78×10^{-4}
MK-JCS 28-ZT-AL	95.0	160	200	15 – 38	66	30.0	90	35.0	20	15	4.0	M5	8	6.00	M5	0.240	1.70×10^{-4}
MK-JCS 38-ZT-AL	190	325	405	20 – 45	80	38.0	114	45.0	24	18	4.0	M6	8	10.0	M6	0.490	5.17×10^{-4}
MK-JCS 42-ZT-AL	265	450	560	25 – 50	95	46.0	126	50.0	26	20	4.0	M8	4	25.0	M8	0.772	11.17×10^{-4}
MK-JCS 48-ZT-AL	310	525	655	30 – 55	105	51.0	140	56.0	28	21	4.0	M10	4	49.0	M10	1.066	18.81×10^{-4}

ORDERING CODE EXAMPLE • 选型编码示例: MK-JCS28 - ZT - 20 - 24 - 98 - AL

Note: M1 designates the pull-off jacking thread located between the axial clamping screws (注：M1为拆卸螺纹，位于胀紧螺栓之间)

MK-JCS28	ZT	20	24	98	AL	—
Model Size 产品规格	Taper Clamping Ring 胀紧套结构 (ZT)	Left Bore d_1 左孔径 Ø20	Right Bore d_2 右孔径 Ø24	98 ShA Spider 弹性体硬度 98ShA	Aluminum Alloy 铝质材料 (AL)	Special Note 备注

PROGRESSIVE CROSS-TIGHTENING PROCEDURE • 锥面胀紧套对称锁紧规程

Tighten the **Z** internal axial clamping screws (**M**) progressively in a diagonal cross-pattern in 3 stages (30% → 60% → 100% of T_A [Nm]) to ensure concentric seating of the taper ring.

DISASSEMBLY VIA PULL-OFF THREADS M1 • 利用拆卸螺纹孔 M1 快速退套

To dismount the hub, fully loosen all clamping screws **M** and thread bolts into the dedicated jacking holes **M_1** to release the conical taper ring axially without pullers.

MISHKIN

Steel Taper-Lock Ring Servo Jaw Coupling • 钢质一体式胀紧套型无齿隙主轴联轴器 (MK-JCS-ZT-S)

High-Speed Heavy-Duty Steel Shrink-Fit Clamping Hubs (v ⩽ 50 m/s)
for CNC Machine Tool Main Spindles

EUROPEAN SERVO STANDARD • 欧洲伺服标准
DIN 740-2 • ISO 286-2 H7 • DIN 6885-1 JS9

PRODUCT & CAD DRAWING • 钢质胀紧套型实物图与结构尺寸图 (MK-JCS-ZT-S)



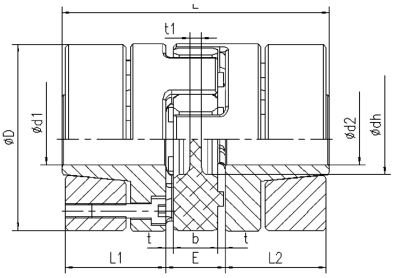

Steel Taper Ring: C45E / 42CrMo4 Steel Hub & Taper Ring • Max Linear Speed **v = 50 m/s**

TECHNICAL CHARACTERISTICS • 产品技术特点与标准

1. HIGH-SPEED SPINDLE & ROLL DRIVE PERFORMANCE • 线速度高达 50 M/S 的主轴传动

Zero-backlash integrated steel taper clamping sleeve engineered for CNC machine tool main spindles, press rolls, and high-torque reversing servo drives up to v = 50 m/s.

无齿隙传动，一体式全钢胀紧轴套；适用于机床主轴传动、压机轧辊传动，运转极其平稳，允许外圆线速度高达 50 m/s。

2. IDENTICAL BIDIRECTIONAL CHARACTERISTICS • 极高响应速度与正反转同特性

High torsional stiffness and 360° interference fit guarantee identical dynamic characteristics in both clockwise and counter-clockwise rotation.

高响应速度、传递扭矩大、正反转动态特性完全相同；内侧布置的胀紧螺栓使结构更紧凑且易于拆装。

3. MANDATORY SHAFT FIT TOLERANCES • 轴与孔配合公差要求

Bore < Ø55 mm: Shaft fit ISO H7 / k6. Bore ⩾ Ø55 mm: Shaft fit ISO G7 / m6.

孔径 < Ø55 mm 时配合公差为 H7/k6；孔径 ⩾ Ø55 mm 时配合公差为 G7/m6（若配合间隙增大，传递力矩将减小）。

DIMENSIONAL, CLAMPING & INERTIA TABLE — MK-JCS-ZT-S SERIES • 钢质胀紧套型联轴器技术参数与尺寸表

Hub & Taper Ring Material: C45E / 42CrMo4 High-Strength Steel

Model 型号	Rated Torque T_{KN} [Nm] 弹性体扭矩 [Nm]		Dimensions • 尺寸 [mm]							Taper Clamping Screws • 胀紧螺栓				Single Hub Mass 最大孔径时单轴套重 [kg]	Single Hub Inertia J 最大孔径时单轴套惯量 [kg • m²]
	98 ShA	64 ShD	Bore d_1 (min–max)	D	d_h	L	L1, L2	E	b	t_1	Screw M 螺栓	Qty Z 数量	T_A [Nm] 锁紧力矩	Pull-Off M_1 拆卸螺纹		
MK-JCS 19-ZT-S	17	21	10 – 22	41	18	66	25	16	12	3.0	M4	6	4.1	M4	0.179	0.44 × 10^{-4}
MK-JCS 24-ZT-S	60	75	14 – 28	56	27	78	30	18	14	3.0	M5	4	8.5	M5	0.399	1.91 × 10^{-4}
MK-JCS 28-ZT-S	160	200	15 – 38	66	30	90	35	20	15	4.0	M5	8	8.5	M5	0.592	4.18 × 10^{-4}
MK-JCS 38-ZT-S	325	405	20 – 45	80	38	114	45	24	18	4.0	M6	8	14.0	M6	1.225	12.9 × 10^{-4}
MK-JCS 42-ZT-S	450	560	25 – 50	95	46	126	50	26	20	4.0	M8	4	35.0	M8	2.300	31.7 × 10^{-4}
MK-JCS 48-ZT-S	525	655	30 – 55	105	51	140	56	28	21	4.0	M10	4	69.0	M10	3.080	52.0 × 10^{-4}
MK-JCS 55-ZT-S	685	825	35 – 70	120	60	160	65	30	22	4.5	M10	4	69.0	M10	4.670	103.0 × 10^{-4}
MK-JCS 65-ZT-S	940	1175	40 – 70	135	68	185	75	35	26	4.5	M12	4	120	M12	6.700	191.0 × 10^{-4}
MK-JCS 75-ZT-S	1920	2400	42 – 80	160	80	210	85	40	30	5.0	M12	5	120	M12	9.900	396.8 × 10^{-4}
MK-JCS 90-ZT-S	3600	4500	50 – 105	200	104	245	100	45	34	6.5	M16	5	295	M16	17.70	1136 × 10^{-4}

ORDERING CODE EXAMPLE • 选型编码示例: MK-JCS28 - ZT - 20 - 24 - 98 - S

M1 = Pull-Off Thread between Clamping Screws | Fit: H7/k6 (< Ø55), G7/m6 (⩾ Ø55)

MK-JCS28	ZT	20	24	98	S	—
Model Size 产品规格	Taper Clamping Ring 胀紧套结构 (ZT)	Left Bore d_1 左孔径 Ø20	Right Bore d_2 右孔径 Ø24	98 ShA Spider 弹性体硬度 98ShA	Steel Material 钢质材料 (S)	Special Note 备注